This is a digital copy of a book that was preserved for generations on library shelves before it was carefully scanned by Google as part of a project to make the world's books discoverable online.

It has survived long enough for the copyright to expire and the book to enter the public domain. A public domain book is one that was never subject to copyright or whose legal copyright term has expired. Whether a book is in the public domain may vary country to country. Public domain books are our gateways to the past, representing a wealth of history, culture and knowledge that's often difficult to discover.

Marks, notations and other marginalia present in the original volume will appear in this file - a reminder of this book's long journey from the publisher to a library and finally to you.

**Usage guidelines**

Google is proud to partner with libraries to digitize public domain materials and make them widely accessible. Public domain books belong to the public and we are merely their custodians. Nevertheless, this work is expensive, so in order to keep providing this resource, we have taken steps to prevent abuse by commercial parties, including placing technical restrictions on automated querying.

We also ask that you:

+ *Make non-commercial use of the files* We designed Google Book Search for use by individuals, and we request that you use these files for personal, non-commercial purposes.

+ *Refrain from automated querying* Do not send automated queries of any sort to Google's system: If you are conducting research on machine translation, optical character recognition or other areas where access to a large amount of text is helpful, please contact us. We encourage the use of public domain materials for these purposes and may be able to help.

+ *Maintain attribution* The Google "watermark" you see on each file is essential for informing people about this project and helping them find additional materials through Google Book Search. Please do not remove it.

+ *Keep it legal* Whatever your use, remember that you are responsible for ensuring that what you are doing is legal. Do not assume that just because we believe a book is in the public domain for users in the United States, that the work is also in the public domain for users in other countries. Whether a book is still in copyright varies from country to country, and we can't offer guidance on whether any specific use of any specific book is allowed. Please do not assume that a book's appearance in Google Book Search means it can be used in any manner anywhere in the world. Copyright infringement liability can be quite severe.

**About Google Book Search**

Google's mission is to organize the world's information and to make it universally accessible and useful. Google Book Search helps readers discover the world's books while helping authors and publishers reach new audiences. You can search through the full text of this book on the web at `http://books.google.com/`

UC-NRLF
$B 272 098

LIBRARY
OF THE
UNIVERSITY OF CALIFORNIA.

*Class*

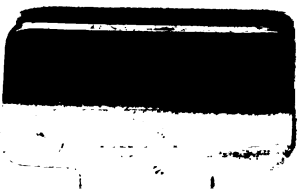

## NOTICE

**This Book Has Been Brought Up-to-Date by the Addition of an Appendix Which Describes Fully the Improved Westinghouse Equipment Developed for Use on Locomotives and Freight Cars. (See Pages 301 to 373.)**

THE NORMAN W. HENLEY
PUBLISHING COMPANY
132 Nassau Street, New York, U. S. A.

UP-TO-DATE

# AIR BRAKE CATECHISM

A PRACTICAL AND COMPLETE WORK, TREATING ON THE EQUIPMENT MANUFACTURED BY THE WESTINGHOUSE AIR BRAKE COMPANY, INCLUDING THE No. 5 AND No. 6 ET LOCOMOTIVE BRAKE EQUIPMENTS; THE K (QUICK-SERVICE) TRIPLE VALVE FOR FREIGHT SERVICE; AND THE CROSS COMPOUND PUMP. THE OPERATION OF ALL PARTS OF THE APPARATUS IS EXPLAINED IN DETAIL, AND A PRACTICAL WAY OF FINDING THEIR PECULIARITIES AND DEFECTS WITH A PROPER REMEDY IS GIVEN.

## Contains Over
## 2,000 Questions With Their Answers

INTENDED AS EXAMINATION QUESTIONS FOR ENGINEERS AND FIREMEN, AND ALL OTHER RAILROAD MEN, PREPARING TO PASS AN EXAMINATION ON THE SUBJECT OF AIR BRAKES. ENDORSED AND USED BY AIR BRAKE INSTRUCTORS AND EXAMINERS ON NEARLY EVERY RAILROAD IN THE UNITED STATES.

By ROBERT H. BLACKALL

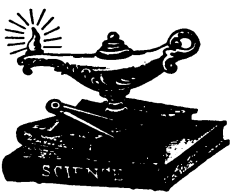

*Fully illustrated by detail engravings and folding plates*

TWENTY-THIRD EDITION

Revised and Enlarged

NEW YORK:
THE NORMAN W. HENLEY PUBLISHING COMPANY
132 NASSAU STREET
1908

LIBRARY
OF THE
UNIVERSITY
OF
CALIF

TF425
B6
1908
GENERAL

COPYRIGHTED, 1898
BY
NORMAN W. HENLEY & CO.

COPYRIGHTED, 1900
BY
NORMAN W. HENLEY & CO

COPYRIGHTED, 1903
BY
NORMAN W. HENLEY & CO.

COPYRIGHTED, 1907
BY
THE NORMAN W. HENLEY PUBLISHING CO.

COPYRIGHTED, 1908
BY
THE NORMAN W. HENLEY PUBLISHING CO.

# Dedication.

THIS BOOK IS RESPECTFULLY DEDICATED TO

R. C. BLACKALL,

SUPERINTENDENT OF MACHINERY, D. & H. CO.

AS A TOKEN OF APPRECIATION

OF HIS

EXECUTIVE ABILITY AND INTELLIGENT SERVICE

DURING A LONG PERIOD OF

PRACTICAL RAILROADING.

179712

# PREFACE TO TWENTY-THIRD EDITION.

THE issuing of the present edition of this book, Up-to-date Air-Brake Catechism with an appendix, shows that the book is filling the want it was designed to meet.

The changed conditions of service which now prevail, and which consist in longer trains, cars of heavier capacity and locomotives with a power and weight commensurate with their increased duties, has made imperative some radical changes in the air brake art. The original brake was designed with the idea in mind that the maximum length of train would be fifty cars, and the capacity of these cars 60,000 pounds. The usual capacity is now 100,000 pounds, the number of cars in a train is often over 100, and the hauling power of the locomotive has kept pace. The result of these changes has been that the apparatus which has been in use for so many years is not adequate to handle, with the desired efficiency, the long and heavy trains of to-day.

To meet these conditions the Westinghouse Air Brake Company has developed an engine and car equipment by the use of which even better results are obtained with the long and heavy trains than could be obtained with the older equipment and the shorter trains.

The appendix to this book has been written with a view of explaining the operation of this new equipment with which it will be necessary for railroad employees to become familiar to avail themselves of the many advantages which it makes possible.

The author wishes to take this opportunity to again thank the railroad public for their continued support which has been very gratifying to him.

April, 1908. ROBERT H. BLACKALL.

## PREFACE TO TWELFTH EDITION.

The success of previous editions of this book has led the author to add several new chapters to the present edition, and at the same time the work has been revised and corrected to date.

I desire to now express thanks for the many favorable letters received from students of the Air Brake.

ROBERT H. BLACKALL.

# PREFACE.

THERE is a law compelling railroad companies to have a sufficient number of cars to control trains equipped with air brakes by January 1, 1900. In view of this, there is a vast army of railroad employees, especially engine and train crews and air-brake machinists, whose work demands a practical and thorough understanding of that subject.

There is no book published which gives a complete study of the air-brake equipment, including the latest devices and inventions used. It is to meet the demand for such a book that the present work is designed.

The book includes a complete discussion of all parts of the air-brake equipment, the troubles and peculiarities encountered, and a practical way to find and remedy them. It is written in the familiar style of the class-room, the method of question and answer being adopted, as in that way each point to be enforced may be more definitely and clearly brought out.

Train and engine crews will find special and practical assistance to their work under the subjects TRAIN HANDLING and TRAIN INSPECTION.

The aim of the author has been to make the subject matter of such a character as will be readily understood by beginners, and by progression under each topic, to cover also the more intricate work, which will make the book valuable to those advanced in the subject.

ROBERT H. BLACKALL,
Air-Brake Inspector, D. & H. C. Co.

# TABLE OF CONTENTS.


| PREFACE. | PAGE |
|---|---|
| Beginnings of the Air Brake | 17–20 |
| Westinghouse Automatic Brake | 21 |
| Triple Valve | 22–48 |
| Plain Triple Valve | 22–34 |
| Function of the Triple Valve | 27–34 |
| Quick-Action Triple Valve | 35–48 |
| Peculiarities and Troubles of the Triple Valve | 40–48 |
| Freight Equipment | 49–53 |
| Piston Travel | 54–65 |
| American Brake-Slack Adjuster | 66–73 |
| Westinghouse Retaining Valves — Operation, Troubles, Benefits | 74–83 |
| Main Reservoir | 84–88 |
| Westinghouse Engineer's Brake Valves | 89–131 |
| G 6 Brake Valve | 91–117 |
| Slide-Valve Feed Valve | 101–104 |
| Feed Valve or Trainline Governor (Old Style) | 105–109 |
| Engineer's Equalizing Reservoir or "Little Drum" | 110–113 |
| Peculiarities and Troubles | 114–117 |
| Westinghouse D 8 Engineer's Brake Valve | 118–129 |
| Operation and Description | 118–125 |
| Peculiarities and Troubles | 126–129 |
| Comparison of G 6 and D 8 Engineer's Brake Valve | 130–131 |
| Westinghouse Air Pumps | 132–153 |
| Nine and One-Half-Inch Pump | 132–144 |
| Peculiarities and Care | 137–144 |
| Eight-Inch Pump | 145–149 |
| Nine and One-Half-Inch Pump, Right and Left Hand | 149–150 |
| Eleven-Inch Pump | 151–153 |
| Westinghouse Pump Governors— | |
| Operation, Peculiarities and Care | 154–160 |

TABLE OF CONTENTS.


| | PAGE |
|---|---|
| The Sweeney Compressor | 161 |
| The Water Brake | 162–169 |
| For Simple Engines | 163–165 |
| For Compound Engines | 165–169 |
| Westinghouse Signal System | 170–184 |
| Operation and Description | 170–178 |
| Peculiarities and Troubles | 179–184 |
| High-Speed Brake | 185–196 |
| Schedule U or High-Pressure Control | 197–200 |
| Combined Automatic and Straight Air | 201–213 |
| Duplex Main Reservoir Regulation | 214–216 |
| Appliances and Methods of Testing Triple Valves | 217–227 |
| Lubricants | 228 |
| Air Brake Recording Gages | 229–233 |
| Train Inspection | 234–242 |
| Train Handling | 243–261 |
| Brake Tests | 261–267 |
| Piping | 268–269 |
| Cam Brake | 270 |
| Braking Power and Leverage | 271–286 |
| Cylinders to be Used on Different Vehicles | 287 |
| American Brake Leverage | 288–290 |
| Air Hose and Specifications | 291–294 |
| Rules and Formulæ for Air-Brake Inspectors | 295–299 |
| No. 5 E T LOCOMOTIVE BRAKE EQUIPMENT | 307–349 |
| Brake Valves (automatic and independent) | 314–326 |
| Distributing Valve | 327–336 |
| Safety Valve | 337–338 |
| Feed Valves B–4 and B–3 | 339–341 |
| SF (excess-pressure) Pump Governor | 342–345 |
| Defects of ET Equipment | 346–349 |
| K Type (quick-service) Triple Valve | 350–357 |
| 8½-Inch Cross-Compound Pump | 358–367 |
| No. 6 E T Locomotive Brake Equipment | 368–373 |

# LIST OF ILLUSTRATIONS OF WESTINGHOUSE AIR BRAKE AND SIGNAL EQUIPMENT.


PAGE

Plate IV. Showing Different Positions and Parts of the Plain Triple Valve, including:

Fig. 1. Plain Triple Valve—Release Position . .

Fig. 2. Plain Triple Valve—Service Position . .

Fig. 3. Plain Triple Valve—Lap Position . .

Fig. 4. Plain Triple Valve—Emergency Position .

Plate V. Showing Different Positions and Parts of the Quick-Action Triple Valve, including:

Fig. 5. Quick-Action Triple Valve—Release Position.

Fig. 6. Quick-Action Triple Valve—Service Position.

Fig. 7. Quick-Action Triple Valve—Lap position .

Fig. 8. Quick-Action Triple Valve—Emergency Position . . . . . .

Fig. 9. Quick-Action Triple Valve Slide-Valve Bushing

Fig. 10. Quick-Action Triple Valve Slide-Valve . .

Fig. 11. Freight Equipment . . . . . 50

Fig. 12. Showing Application of American Brake-Slack Adjuster to a Passenger Car . . . . 67

Fig. 13. Sectional View of American Brake-Slack Adjuster 70

Fig. 14. Showing Proper Method of Drilling Brake Cylinders when used with The American Brake-Slack Adjuster . . . . . 72

# List of Illustrations.


| | | PAGE |
|---|---|---|
| Fig. 15. | Sectional View of Pressure Retaining Valve | 75 |
| Fig. 16. | Retaining Valve used with 12, 14 and 16-inch Brake Cylinders | 82 |
| Fig. 17. | "Pullman" Retaining Valve, used on Vestibule Cars | 82 |
| Fig. 18. | Standard Retaining Valve used with 6, 8 and 10-inch Brake Cylinders | 82 |
| Fig. 19. | Driver Brake Retaining Valve | 82 |
| Fig. 20. | D8 Engineer's Brake Valve—Release Position | 93 |
| Plate VI. | Showing Sectional Views of the G 6 Engineer's Brake Valve and Slide Valve Feed Valve, including: | |
| Fig. 21. | G 6 Engineer's Brake Valve—Release Position | |
| Fig. 22. | G 6 Engineer's Brake Valve—Running Position | |
| Fig 23. | G 6 Engineer's Brake Valve—Plan View | |
| Fig. 24. | Slide Valve Feed Valve, Section Through Supply Valve Piston | |
| Fig. 25. | Slide Valve Feed Valve, Section Through Regulating Part | |
| Fig. 26. | Rotary Valve of G 6 Engineer's Brake Valve (top view) | |
| Fig. 27. | Rotary Valve of G 6 Engineer's Brake Valve (bottom view) | |
| Fig. 28. | Feed Valve or Train Line Governor (old style) | 106 |
| Fig. 29. | Feed Valve Gasket | 107 |
| Fig. 30. | Engineer's Equalizing Reservoir or "Little Drum" | 110 |
| Fig. 31. | D 8 Engineer's Brake Valve—Release Position | 118 |
| Fig. 32. | D 8 Engineer's Brake Valve—Release Position | 122 |
| Fig. 33. | D 8 Engineer's Brake Valve—Plan View of Rotary Seat | 123 |
| Fig. 34. | Rotary Valve of D 8 Engineers Brake Valve (bottom view) | 124 |
| Plate VII. | Nine and One-Half Inch Pump. | |
| Fig. 35. | Nine and One-Half-Inch Pump, Front Section | |
| Fig. 36. | Nine and One-Half-Inch Pump, Side Section | |
| Fig. 37. | Nine and One-Half-Inch Pump, Main Valve Bush | |
| Fig. 38. | Eight-Inch Pump in Section | 146 |
| Fig. 39. | Right and Left Nine and One-Half-Inch Pump | 150 |

# List of Illustrations.


| | | PAGE |
|---|---|---|
| Plate VIII. | Eleven-Inch Pump. | |
| Fig. 40. | Eleven-inch Pump, Front Section | |
| Fig. 41. | Eleven-inch Pump, Side Section | |
| Fig. 42. | Improved Pump Governor | 155 |
| Fig. 43. | Old Style Pump Governor | 158 |
| Fig. 44. | Water Brake on Simple Engine | 164 |
| Fig. 45. | Baldwin Water Brake for Compound Engines. Side View | 166 |
| Fig. 46. | Baldwin Water Brake for Compound Engines. Front View | 168 |
| Fig. 47. | Signal Equipment on Engine | 170 |
| Fig. 48. | Signal Equipment on Passenger Car | 172 |
| Fig. 49. | Air Signal Strainer | 173 |
| Fig. 50. | Car Discharge Valve | 174 |
| Fig. 51. | Signal Valve | 176 |
| Fig. 52. | Improved Signal Reducing Valve | 177 |
| Fig. 53. | Signal Whistle | 178 |
| Fig. 54. | Old Style Reducing Valve | 179 |
| Plate IX. | High-Speed Brake Equipment. | |
| Fig. 55. | High-Speed Automatic Reducing Valve | 187 |
| Fig. 56. | Section of High-Speed Reducing Valve Showing Position of Ports in Emergency Stop | 189 |
| Fig. 57. | Section of High-Speed Reducing Valve Showing Position of Ports with Cylinder Pressure Slightly Exceeding 60 Pounds | 189 |
| Fig. 58. | Section of High-Speed Reducing Valve Showing Position of Ports in Release Position | 189 |
| Fig. 59. | High-Speed Reducing Valve Shown Attached to Car | 191 |
| Fig. 60. | Showing Comparative Efficiency of Westinghouse Brakes | 193 |
| Plate X. | Schedule U or High-Pressure Control Apparatus. | |
| Fig. 61. | Safety Valve | 199 |
| Fig. 62. | Diagrammatic Representation of Combined Automatic and Straight-Air Brake | 202 |
| Fig. 63. | Double Check Valve | 204 |
| Fig. 64. | Straight-Air Brake Valve | 208 |
| Fig. 65. | Straight-Air Brake Valve | 208 |
| Fig. 66. | Straight-Air Brake Valve | 209 |
| Fig. 67. | Straight-Air Brake Valve | 209 |

## List of Illustrations.


| | | PAGE |
|---|---|---|
| Fig. 68. | Section Through Straight-Air Brake Valve . | 209 |
| Fig. 69. | Duplex Main Reservoir Regulation, Method of Piping . . . . . | 215 |
| Fig. 70. | Method of Drilling Brake Valve for Duplex Main Reservoir Regulation . . . . | 215 |
| Fig. 71. | Method of Drilling Brake Valve for Duplex Main Reservoir Regulation . . . . | 215 |
| Fig. 72. | Controlling Valve, End Section . . . . | 218 |
| Fig. 73. | Controlling Valve, Side Section . . . . | 218 |
| Fig. 74. | Portable Yard Testing Plant, Side View . . | 220 |
| Fig. 75. | Portable Yard Testing Plant, End View . . | 221 |
| Plate XI. | Cleaner's Test for Triple Valves, including: | |
| Fig. 76. | Cleaner's Test, Side View . . . . . | |
| Fig. 77. | Cleaner's Test, Top View . . . . . | |
| Fig. 78. | Cleaner's Test, End View . . . . . | |
| Plate XII. | Shop Repair Test for Triple Valves, including: | |
| Fig. 79. | Shop Repair Test, Side View . . . | |
| Fig. 80. | Shop Repair Test, Top View . . . | |
| Fig. 81. | Shop Repair Test, End View . . . | |
| Fig. 82. | Air Brake Recording Gauge, Revolving Type . | 231 |
| Fig. 83. | Air Brake Recording Guage, Horizontal Type . | 232 |
| Fig. 84. | Lever of First Class . . . . . | 274 |
| Fig. 85. | Lever of First Class, Applied to Car Wheel . | 274 |
| Fig. 86. | Lever of Second Class . . . . . | 276 |
| Fig. 87. | Lever of Second Class, Applied to Car Wheel . | 276 |
| Fig. 88. | Lever of Third Class . . . . . | 277 |
| Fig. 89. | Lever of Third Class, Applied to Car Wheel . | 277 |
| Fig. 90. | Hodge System of Leverage . . . . . | 278 |
| Fig. 91. | Steven's System of Leverage . . . . | 284 |
| Fig. 92. | Hodge System of Leverage . . . . . | 284 |
| Fig. 93. | Leverage System for Tenders . . . . | 284 |
| Fig. 94. | American Driver-Brake Leverage . . . | 289 |
| Fig. 95. | Showing Markings on Air Hose . . . . | 293 |
| Fig. 96. | Method of Testing Hose . . . . . | 294 |
| Plate XIII. | This shows exterior and sections of all of the valves included in Schedule ET. The numbers of the cuts are from Figure 97 to 118, inclusive. | |
| Plate XIV. | K (quick-service) Triple Valve, Figs. 121 to 128, inclusive. | |
| Figs. 129 to 131, inclusive: | The 8½-inch Cross-Compound Pump. | |

# BEGINNINGS OF THE
# AIR BRAKE

*Q. What is an air brake?*

A. A brake worked by compressed air.

*Q. What was the first form of air brake used?*

A. The straight air brake.

*Q. By whom and when was it invented?*

A. By George Westinghouse, Jr., in 1869.

*Q. What forms of brake did it supplant?*

A. The hand and the spring brakes.

*Q. What parts were necessary to operate the straight air brake?*

A. An air pump, main reservoir, a valve called the three-way cock used to control the application and release of the brakes, a train pipe, and brake cylinders.

*Q. What parts were on the engine?*

A. A main reservoir, pump, and engineer's valve.

*Q. What parts were on the car?*

A. The train pipe and cylinder.

*Q. Where was the braking power stored with this system?*

A. In the main reservoir on the engine.

*Q. How were the brakes applied?*

A. By changing the position of the three-way cock on the engine so as to allow the main reservoir pressure to flow into the train line. The train line, connected directly with the brake cylinder, allowed air to pass into the cylinder, forcing the piston out and applying the brake.

*Q. Why was this brake unsatisfactory?*

A. For several reasons. First, the tendency of the brake was to apply soonest at the head end of the train. If they were applied suddenly the slack running ahead would cause severe shocks and damage. Second, if a hose burst in the train, the brakes could not be set with air, as it would pass out the burst hose to the atmosphere. Third, on a long train the main reservoir pressure would equalize with that in the train line and brake cylinders at a low pressure on account of the large space to be filled; before the brakes were full set the engineer would have to allow the pump to compress air into the train line and brake cylinders, and before maximum braking power was obtained the train would be stopped. Fourth, the effect of friction on the flow of air from main reservoir through a long train made this brake slower.

*Q. What was the next form after the straight air brake?*

A. The automatic.

*Q. By whom and when was it invented?*

A. By George Westinghouse, Jr., in 1873.

*Q. What gains over the hand brake are made with the air brake?*

A. With a train of fifty modern equipped air-brake cars, a full and harder set brake is obtained on the entire train more quickly than a hand brake can be set on one car. Since trains handled on heavy grades have to be

slowed down for the purpose of recharging, by this means the wheels are given a chance to cool. With the hand brakes used on heavy grades, the shoes grind against the wheels down nearly, or quite all of the grade so that often the train is wrecked because the wheels are heated to so high a temperature that they break. Air brakes give us an increased speed of trains with greater safety.

*Q. What brake followed the plain-automatic brake?*

A. The quick-action brake, which almost immediately superseded the plain-automatic brake in passenger service, and did very quickly in freight service. With this improved apparatus the brake on the last of a fifty-car train could, if so desired, be applied in two and one-half seconds from the movement of the brake valve handle on the engine.

*Q. Is the quick-action brake still in use?*

A. Yes; all passenger and freight cars are now equipped with this brake, but at present a modified form is coming into general use in passenger, mail and express service. The modified form is known as the high-speed brake, the operation of which is described in another part of this book. Plate I shows the parts employed and general arrangement of same on an engine, tender and passenger car.

*Q. Have any modifications in the general equipment of the quick-action brake been made in freight service?*

A. Not in the car equipment itself aside from the addition of the retaining valve. The engine equipment, though having been gradually developed, still remains the same in general, excepting some modifications that have been made to meet special conditions. These special modifications include the high pressure control apparatus commonly known as schedule U, the duplex

method of main reservoir regulation and the combined automatic and straight-air brake, all of which are illustrated and described in detail in other parts of this book. The general arrangement of the brake equipment on a freight engine, freight-engine tender and freight car is shown on Plate II.

*Q. What else has been developed along with the air-brake apparatus used in passenger service?*

A. The air whistle signal system, a general plan of which is shown on the passenger equipment in Plate I.

LIBRARY
OF THE
UNIVERSITY
OF
CALIFORNIA

## THE WESTINGHOUSE AUTOMATIC BRAKE.

*Q. Where was the difference in the equipment between the straight air and automatic brake made?*

A. Besides the train line and brake cylinder, a plain triple and an auxiliary reservoir were added to the car.

*Q. With the cars equipped with the automatic brake, what gain was made over the straight air brake?*

A. (1) The necessary braking power, regardless of the length of the train, was stored in the auxiliary under each car for that car, so that the brakes could be full set very quickly compared to the action of the straight air brake. (2) If the train broke in two or a hose burst, the triples would automatically apply the brakes, while with the straight air the brakes could not be applied.

*Q. What was the essential feature of the automatic brake?*

A. The triple valve known as the *plain triple.*

*Q. Where was it located?*

A. On the car, at the junction of the train line, auxiliary, and brake cylinder.

*Q. Did the pump and three-way cock remain on the engine?*

A. Yes; this was left for later development.

## PLAIN TRIPLE.

*Q. In the study of the triple valve what is the main thing to be borne in mind in order to understand its operation and its probable action under the many and varied conditions which are encountered in actual service?*

A. In the study of the triple valve, as well as almost any other part of the air-brake or air-signal apparatus, a clearer understanding will result if one starts at a problem by first asking himself the question, Which is the greater or controlling pressure acting on the part under consideration? With this point thoroughly understood the resultant action of the parts in question can be readily traced; for instance, if a brake is applied, and there is a leak in the auxiliary reservoir, we know that this will have the effect of lowering the pressure on one side of the triple piston. We then know that the tendency will be for the piston to move away from the greater or trainpipe pressure, and, as will be explained later, this defect will cause the release of the brake in question.

*Q. Name the different parts of the plain triple valve, Plate IV.*

A. 13 and 15 are the cut-out cock and the handle; 8, the graduating post; 9, the graduating spring; *m* and

*n* are feed ports; 5 is the triple piston; 6, the slide valve; 7 is the graduating valve which works inside the slide valve; 12, a piston-packing ring; 18, slide-valve spring; *Y*, the port leading to the auxiliary; *X* leads to brake cylinder; *W* leads to train-line pressure.

*Q. For what are valve 13 and handle 15 used?*

A. They permit the triple to be used as straight air, automatic or cut out entirely, as illustrated by the cut (Fig. 1, Plate IV).

*Q. What three positions has the handle 15 (Fig. 1)?*

A. As shown in the cut, by the different positions of the handle: so that the triple would be cut in, as it is with the handle 15 at right angles to the triple; pointing straight down, in which case, air coming in at W from the train line would go through port *e* of the plug-cock 13 and out into the brake cylinder through *X*; or the handle could stand at an angle of 45°, in which position ports *f*, *a* and *d* would all be blanked.

In the first position the triple is cut in as automatic, in the second for straight air. and in the third the triple is cut out entirely.

*Q. Can the modern plain triple now sent out be cut into straight air?*

A. No.

*Q. Why not?*

A. Because, as shown in Figs. 2, 3 and 4, Plate IV, the handle 15 and plug 13 are no longer used. The cut-out cock is now placed in the crossover pipe (Plate I).

*Q. Why was it necessary to have it so arranged that it could be cut in as straight air?*

A. When the brakes were gradually being changed

from straight air to automatic, it sometimes happened that only a few cars in the train had the triple applied. In this case the handle 15 was turned so as to cut the car into straight air to be used with the other straight air cars.

*Q. Of what use are 8 and 9 (Fig. 1)?*

A. In applying the brakes, when piston 5 moves out and touches the stem 8, held by the graduating spring 9 (Fig. 1), the piston is stopped, if a gradual reduction is being made on the train line, when the piston has drawn the slide valve down far enough to make a port connection between the auxiliary and cylinder.

*Q. If a quick reduction is being made on the train line, will the spring 9 stop the triple piston?*

A. No; a quick reduction causes the triple piston 5 to move out quickly, and the sudden impact compresses the spring 9, allowing the piston 5 to move out until it strikes gasket 11, to what is known as emergency position.

*Q. 5 (Fig. 1) is called the triple piston. How is it actuated?*

A. Train-line pressure is on the lower side of the piston and auxiliary pressure on the upper or slide-valve side. It is by changing these pressures that the piston is moved.

*Q. What are the duties of the piston as it moves?*

A. To open and close the feed ports *m* and *n* (Fig. 1) through which the train-line pressure flows into the auxiliary, to move the graduating valve 7 and the slide valve 6.

*Q. What is the duty of the graduating valve 7 (Fig. 1)?*

A. It is the small valve inside the slide valve, and its duty as it is moved backward and forward by the triple piston is to open and close the port *p* through which, in

the service application, auxiliary pressure flows to the brake cylinder.

*Q. Does the graduating valve move every time the triple piston moves?*

A. Yes, because it is fastened to the stem of the piston by a pin which passes through both the graduating valve and the stem of the triple piston. The pin is represented by the dotted lines running through the lower end of the graduating valve at right angles to it.

*Q. Could we get along without the graduating valve?*

A. Yes, but the sensitiveness of the triple would be destroyed.

*Q. How does the graduating valve make the triple sensitive?*

A. A reduction of train-line pressure causes the triple to assume service position, and after the auxiliary pressure has expanded to a trifle below that in the train line, piston 5 (Fig. 3) moves back and closes the graduating valve on its seat. Train-line pressure had simply to overcome the friction on the triple piston-packing ring to do this, but had we no graduating valve the train-line pressure would have had to be strong enough to overcome the additional friction of the slide valve to move it back far enough to close port *p*. When wishing to apply brakes harder, a heavier reduction would be necessary to again move the slide valve to service position. With the graduating valve, the slide valve is moved to service position with the first reduction, where it remains until the brake is released or in case the emergency is used.

*Q. What are the duties of the slide valve?*

A. In the plain triple, when moved by the triple piston, it serves to make a connection between the

auxiliary and the brake cylinder or between the brake cylinder and the atmosphere.

*Q. Does the slide valve move every time the piston moves?*

A. No; the slide valve will not move when the piston starts down until it has moved far enough for the lug just above 18 (Fig. 1) to strike the valve. The same, if the piston is down full stroke; when it starts back the slide valve will not move until the piston has gone back far enough to seat the graduating valve.

*Q. Of what use is the spring 18, Fig. 1?*

A. Its duty is to hold the slide valve on its seat and to prevent dirt from collecting there when there is no auxiliary pressure to hold the valve on its seat, as when the car is "dry."

*Q. What is the difference in the four triple valves shown on Plate IV?*

A. They are all plain triple valves, but the one showing release position is the older type which could be cut into straight air. The other three represent the modern valve which is cut out or in by means of a cut-out cock placed in the cross-over pipe between the drain cup and triple valve.

## FUNCTIONS OF THE TRIPLE IN THE OPERATION OF THE BRAKE.

*Q. Why is this valve called the triple valve?*

A. Because it automatically does three things: charges the auxiliary, applies the brake and releases it.

*Q. If an engine couples to a car that is not charged, how does the triple charge the auxiliary on the car when the hose is coupled and the angle cocks turned so as to allow the compressed air to flow into the train line on this car from the engine?*

A. A cross-over pipe from the main train line couples to the triple at *W* (Fig. 1). The pressure from the train line passes into the triple at *W*, through port *c* as indicated by the arrow into cavity *B;* thence through the feed ports *m* and *n* into the chamber where the slide valve moves and out into the auxiliary at *Y*.

*Q. How long does the air continue to flow into the auxiliary?*

A. Just as long as the train-line pressure is greater than that in the auxiliary, that is, until the pressures are equal on the two sides of the triple piston 5.

*Q. How are the two sides of the piston referred to?*

A. The lower side, having train-line pressure on it, is called the train-line side of the piston, and the upper side, having auxiliary pressure on it, the auxiliary or slide-valve side.

*Q. What is necessary to cause piston 5 (Fig. 1) to move from release position?*

A. Any reduction of train-line pressure; a break in the hose; the use of his valve by the engineer to make a train-line reduction.

*Q. If a reduction of train-line pressure is made, how does the triple respond?*

A. Auxiliary pressure now being greater forces the triple piston down.

*Q. What two things does the piston do when it starts to move down?*

A. It closes the feed grooves *m* and *n* and moves the graduating valve from its seat.

*Q. Does the slide valve move as soon as the piston?*

A. No, not until the lug above 18 (Fig. 1) is drawn down far enough to rest against the slide valve.

*Q. What does the slide valve do as soon as the lug strikes and moves it down?*

A. It first closes the exhaust port *g* which in release position connected the brake cylinder with the atmosphere through *X*, *d*, *e*, *f*, *g*, *h* and *k*.

*Q. How far down does the triple piston travel?*

A. Until the projecting stem of the piston strikes the stem 8 held by the graduating spring 9 (Fig. 2).

*Q. When these stems touch, how does the slide valve stand?*

A. Port *p* of the slide valve is in front of port *f*, and, as the graduating valve was pulled from its seat when the piston first moved, the auxiliary pressure is now free to pass into the slide valve through port *l*,

called the service or graduating port, which leads into port *p*. The air passes through ports *l*,*p*,*p*,*f f*, and out through *X* to the brake cylinder.

*Q. How long does the graduating valve remain off its seat so as to allow auxiliary pressure to flow to the brake cylinder?*

A. We reduced the train-line pressure to allow the greater auxiliary pressure to move the piston down and open the service or graduating port *p* between the auxiliary and cylinder. Just as long as the auxiliary pressure is greater, the piston will stay down and the graduating valve remain unseated. As the auxiliary pressure expands into the brake cylinder it gradually becomes less until, when the train-line pressure becomes enough greater than that in the auxiliary to overcome the friction on the packing ring 12 (Fig. 3), the piston automatically moves back and seats the graduating valve.

*Q. Does the slide valve move?*

A. No, not now.

*Q. Why not?*

A. The train-line pressure was just strong enough to overcome the friction on the packing ring 12, move the piston back, and close the graduating valve. With the ports all closed the piston would also have to compress the air in the auxiliary to go back any farther. Then, too, the pressure left in the auxiliary acting to force the slide valve on its seat produces a friction, if the valve were moved, that the train-line pressure as it stands is not sufficiently strong to overcome.

*Q. How do the auxiliary and train-line pressures now stand?*

A. Practically equal, although the auxiliary pressure had to be a trifle less to allow the triple piston to be moved back sufficiently to seat the graduating valve.

*Q. The brake is now partially applied and the triple is on what is termed lap position; what must be done to apply the brake harder?*

A. Another reduction of train-line pressure must be made.

*Q. How does this set the brake tighter?*

A. The auxiliary pressure once more being stronger than that on the train line forces the triple piston down until it is again stopped by the graduating post. This movement is just sufficient to unseat the graduating valve, the slide valve remaining where it was with its service port *p* (Fig. 2) in front of the brake cylinder. About the same amount of air pressure passes from the auxiliary to the cylinder that was taken from the train line, and the piston once more having a trifle more pressure on the train line than on the auxiliary side moves back sufficiently to seat the graduating valve.

*Q. How long can these train-line reductions continue to be made and cause the brake to set harder?*

A. Until the pressures have finally equalized between the auxiliary and the brake cylinder.

*Q. After the auxiliary and brake-cylinder pressures were equal, would the brake set any harder if all train-line pressure were thrown to the atmosphere?*

A. No; when the brakes are full set the auxiliary and brake-cylinder pressures are equal, and a further reduction of train-line pressure would only be a waste of air that the pump would have to replace in order to release the brakes.

*Q. If a further train-line reduction were made after the brake was full set, would piston 5 (Fig. 1)*

*move any farther than until the piston and graduating post touched?*

A. Yes; the spring 9 could not withstand the auxiliary pressure, as it is so much in excess of the reduced train-line pressure, and the piston would move down until it seated on gasket 11. In this position there would be a direct connection across the end of the slide valve between the auxiliary and brake cylinder, but the brake would not set any tighter, as the auxiliary and brake-cylinder pressures were already equal.

*Q. The brake is now full set. What is necessary to release it?*

A. It is necessary to get the pressure on the train-line side of the triple piston greater than that on its auxiliary side.

*Q. How is this done?*

A. By moving the handle of the engineer's valve so as to connect the pressure of ninety pounds, stored in the large main reservoir on the engine, with the train line. Air flowing from the main reservoir into the train line causes the pressure on the train-line side of the triple piston to be sufficiently strong to overcome auxiliary pressure and force the triple piston to release position.

*Q. When the triple is forced to release position the slide and graduating valves are carried with it. What two port openings are made in this position?*

A. One between the train line and auxiliary through the feed ports *m* and *n* (Fig. 1); and one from the brake cylinder to the atmosphere through ports *d*, *e*, *f*, *g*, *h* and *k*. The triple is in release as shown in the cut.

*Q. We notice that the feed grooves m and n (Fig. 1) are very small. How long would it take to charge an auxiliary from zero to seventy pounds with a*

*constant pressure of seventy pounds on the train line, using the triple now sent out?*

A. About seventy seconds; and occasionally a little longer.

*Q. Will it charge more quickly than this with a greater pressure than seventy pounds on the train line?*

A. Yes.

*Q. Had we a train of fifteen cars, could we charge the fifteen auxiliaries as fast as we could one?*

A. No, because we now have fifteen feed grooves in the triples drawing air from the train line, and the pump cannot compress air fast enough to keep the train-line pressure at seventy pounds.

*Q. Why not make these feed grooves larger so as to charge the auxiliaries more quickly?*

A. The purpose is to make the grooves sufficiently small that on a long train the auxiliaries will charge alike. On a long train there is a tendency for the head auxiliaries to charge faster than the rear ones, if the triple feed grooves are larger than those now used.

*Q. What is likely to happen if some auxiliaries charge faster than others?*

A. As the air is fed from the main reservoir back into the train line until those pressures are equal, and as the pump will not, on a long train, supply air as fast as the triple feed grooves take it from the train line, it follows that the auxiliaries which charge the slower will continue to feed from the train line and cause a reduction that will set some of the head brakes.

*Q. So far we have spoken of the action of the plain triple only in the service application. What*

*is the difference between the service and the emergency?*

A. In service the brakes set gradually, while in emergency they go on very suddenly.

*Q. A gradual reduction sets the brakes in service. What kind of a reduction is necessary to set the brakes in emergency?*

A. A sudden reduction.

*Q. Describe the emergency action of the plain triple.*

A. The suddenness of the train-line reduction causes piston 5 (Fig. 4) to move down suddenly, striking the stem 8 a quick, sharp blow which the graduating spring 9 is not stiff enough to withstand. The piston travels down full stroke and bottoms on gasket 11. This is emergency position, and the slide valve has been drawn down so that air coming through *Y* from the auxiliary passes across the end of the slide valve directly into the large port *f* leading to the brake cylinder without first going through the small service port *p* in the slide valve, as it did in the service position.

*Q. Why does the brake set more quickly?*

A. Because the air goes direct to the cylinder through a larger port than is used in service.

*Q. Do we gain any more pressure with the plain triple in emergency than in full service?*

A. No; in both cases the auxiliary pressure equalizes with that in the brake cylinder, but in emergency these pressures equalize more quickly because of the air reaching the brake cylinder through a larger port.

*Q. Are plain triples still used?*

A. Yes, but they are used almost entirely on engines and tenders. Their use on cars is confined principally to those equipments put on before the quick-action triple was introduced.

*Q Is a plain triple valve always used on tenders?*

A. No; the present practice is to use a plain triple valve on the tenders of freight and switch engines; on the tenders of passenger engines a quick-action triple valve is being used.

*Q. What has led to the use of a quick-action valve on passenger-engine tenders?*

A. The general introduction of the high-speed brake in passenger, mail, and express service is responsible for this practice having become general, although some roads have been using quick-action triples on their tenders in both freight and passenger service for some time.

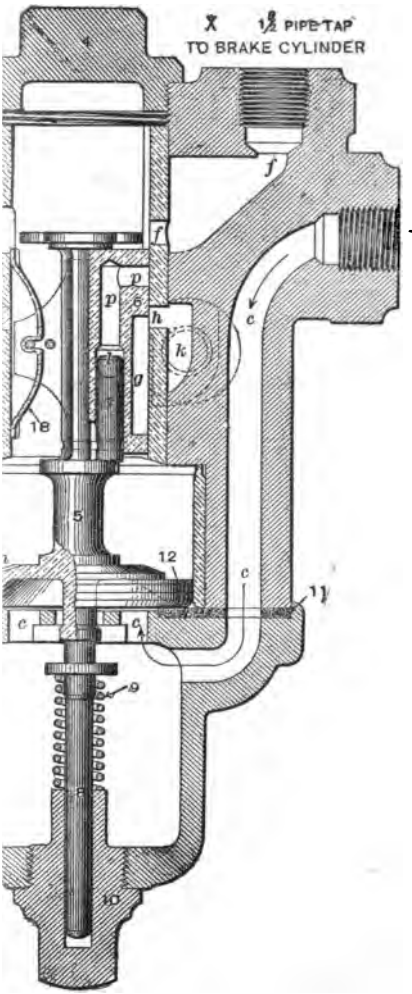


IN TRIPLE VALVE, EMERGENCY POSITION.

## THE WESTINGHOUSE QUICK-ACTION TRIPLE.

*Q. When and by whom was the quick-action triple invented?*

A. In 1887, by George Westinghouse, Jr.

*Q. We already had the plain triple. Why was the quick-action triple necessary?*

A. The plain triple was satisfactory so long as only the service application was used, but not so with the emergency application on a long train. In this latter case the head brakes were full set so much sooner than those on the rear, that the slack of the train ran ahead and often did great damage.

*Q. What two important advantages are gained by the quick-action triple?*

A. We are enabled to set the brakes throughout the train before the slack has a chance to run ahead and do damage, and not only does the brake set more quickly in emergency, but it is also set harder, thus permitting a quicker stop and a higher safe speed for trains.

*Q. In the use of the service application, what is the difference between the action of the plain and the quick-action triples?*

A. None whatever; their action and the parts employed are identical, excepting the additional ports placed in the slide valve of the quick-action triple, which are used only in emergency.

*Q. Will these two kinds of triples scattered through a train work together properly in service?*

A. Perfectly.

*Q. Name the different parts of the quick-action triple not found in the plain triple.*

A. The strainer 16 (Fig. 5). The additional port *s* in the slide valve and the removed corner of the slide valve shown in Fig. 10. 8 is the emergency piston. 10 is the emergency or, as it is more commonly called, the rubber-seated valve. 15 is called the train-line check, also the emergency check.

*Q. Of what use is the strainer 16, Plate V?*

A. Strainer 16 is to keep dirt from getting into the triple in such a way as to close the small feed ports *i* and *k*.

*Q. Of what use is piston 8?*

A. If the triple is moved so as to allow auxiliary pressure to get into port *t* on top of piston 8, this piston will be forced down, thereby forcing the emergency valve 10 from its seat.

*Q. What is done when the rubber-seated or emergency valve 10 (Fig. 8) is forced from its seat?*

A. All air escapes from cavity *Y* and allows train-line pressure to force the train-line check 15 from its seat.

*Q. Of what use is the check valve 15?*

A. If a hose breaks in the train line, the brakes would go full set on the whole train and, with no air in the train line, were it not for the check valve 15, brake-cylinder pressure coming in at *c* would force valve 10 from its seat and pass direct to the train line through cavity *Y* and out of the broken or parted hose. In such a case the brakes would not stay set.

*Q. Explain the action of the quick-action triple in emergency.*

A. A quick train-line reduction causes the auxiliary pressure to force the triple piston out the full length of chamber *h* (Fig. 8), the graduating spring 22 being compressed on account of its inability to withstand the sudden blow from the triple piston.

With the triple piston in the extreme position to the left, or that of emergency, port *s* of the slide valve is in front of port *r*, thus establishing a connection between the auxiliary and brake cylinder. At the same time the removed corner of the slide valve, shown in Fig. 10, is in front of port *t* leading to the top of the emergency piston 8. The auxiliary pressure forcing piston 8 down unseats the emergency valve 10. This valve being unseated allows all pressure to escape from cavity *Y*. With no pressure in cavity *Y* to hold the train-line check to its seat, the train-line pressure under the check raises it and passes into cavity *Y* over seat of valve 10 to cavity *X* and out at *c* into the brake cylinder; at the same time the auxiliary pressure is entering the cylinder through port *r*. As soon as the pressures equalize, piston 8, valve 10, and check 15 go to their normal positions.

*Q. Of what use are Figs. 9 and 10?*

A. Fig. 10 gives a better idea of the location of the ports in the slide valve; Fig. 9, the location of the ports in the bushing inside of which the slide valve works.

*Q. Name the parts.*

A. 26 (Fig. 5) is the drain plug; 16, the train-line strainer; 20, the graduating nut; 21, the graduating stem or post; 22, the graduating spring; 4, the triple piston; *j*, the piston stem; *i* and *k*, the feed ports; 6, the slide-valve spring; 3, the slide valve; 7, the graduating valve; *w*, the service or graduating port; *n*, the exhaust

port; *s*, the emergency port; *z*, a continuation of the service port *w*; 15, the train-line or emergency check; 12, the train-line check spring; 10, the emergency or rubber-seated valve; 8, the emergency piston. The exhaust port *p* leads around outside the brass bushing to the atmosphere as shown in Fig. 9 by the dotted lines.

*Q. What views do Plate V represent?*

A. The triple valve in its four positions; release, service, lap, and emergency positions.

*Q. We have seen that with the quick-action triple the brakes are set harder in emergency. Are brakes set in emergency any harder to release?*

A. They are with quick-action triples only.

*Q. Why?*

A. With the quick-action triples air from the train line helps set the brakes in emergency, and the pressures equalize higher; therefore the train-line pressure must be made higher to overcome the auxiliary pressure and force the triple piston to release position.

With the plain triple the pressures equalize at the same pressure as in service.

*Q. In Fig. 5 a packing ring 31 is shown in the emergency piston. Is this ring found in all quick-action triple valves?*

A. It is in all modern passenger triples but not in freight valves. The small port in piston 8 is also found in passenger valves only.

*Q. After a partial service application has been made, can we get the quick-action?*

A. This depends on the amount of reduction that has been made in service and upon the piston travel. In no case can we gain as much after making even a small service reduction as we could if the sudden

reduction were made when the auxiliaries were fully charged and the brakes released.

After a light reduction a gain over the pressure obtained in full service can be made by going to emergency position if the piston travel is a fair length, but not with short travel.

By using the emergency after a partial service application, even we made no gain of pressure, we would get the full service more quickly.

*Q. How quick must a reduction be made on the train line to throw a triple into quick action?*

A. Faster than the auxiliary pressure can get to the brake cylinder through the service port in the slide valve. In this case the graduating spring will not hold the triple piston from traveling full stroke.

*Q. When a triple is thrown into quick action, which pressure, auxiliary or train line, reaches the brake cylinder first?*

A. Just a flash of auxiliary pressure reaches the cylinder as the service port in the slide valve passes the port leading to the cylinder, but the air from the train line reaches the cylinder first in any considerable volume, as the corner cut off from the slide valve allows the auxiliary pressure to strike piston 8 and force the rubber-seated valve 10 from its seat before port *s* comes in front of port *r*.

*Q. Why is port s (Figs. 8 and 10), used in emergency, made smaller than port z, used in service, to let auxiliary pressure into the brake cylinder?*

A. So as to hold the auxiliary pressure back in emergency and allow as much air as possible to enter the brake cylinder from the train line.

## PECULIARITIES AND TROUBLES OF THE TRIPLE.

From what follows it may seem that a triple will get out of order under any slightest provocation. This however is not true; it is a constant source of wonder to see the fine action of triple valves which have little or poor care. A triple needs no more care than any other piece of mechanism to keep it doing first-class work. The aim of what follows is to bring out its possibilities.

*Q. What could wholly or partially stop the charging of an auxiliary?*

A. The strainer in the train line where the cross-over pipe leading to the triple joins the main train-line, or the strainer 16 in the triple (Fig. 5) being filled with dirt, scale, cinders or oil. Port *i* or *k* might be plugged, the triple might be cut out, or there might be a leak in the auxiliary which let the air out as fast as it came in.

*Q. If all auxiliaries did not charge equally fast, what would be the effect?*

A. If we wish to apply the brakes very soon, the ones with the auxiliaries not fully charged would not respond to the first reduction.

*Q. Occasionally after coupling up the hose in a train it is found that the brake on a car will not apply in response to a reduction of train-line pressure. What might be the trouble other than those just described?*

A. It sometimes happens that the switch crew is responsible for such an occurrence. Sometimes when an

air train is brought into a yard and the yard crew is in a hurry to "drill" the train with an engine not equipped with air, they do not always bleed the train in the proper manner. Instead of opening an angle cock and then bleeding all the reservoirs by hand, they put a piece of coal or wood under an arm of the release valve to do the work of holding the valve from its seat. In this way they save time for themselves but are a source of considerable bother to the ones who inspect the train. On account of the air escaping through a comparatively large port, the leakage is not always detected without a careful examination.

*Q. Will any other trouble result from the strainers being corroded or dirty?*

A. Yes; we might not be able to make a sufficiently quick reduction on the triple piston to get quick action.

*Q. One triple going into quick action makes a sudden train-line reduction which starts the next triple, and that one the next, and so on throughout the train. If five or six cars together in the train were cut out, or had plain triples, or very dirty strainers, would the triples back of these go into quick action when the engineer made a sudden reduction?*

A. No, on account of the action or friction in the passage of the sudden reduction through the six car lengths of pipe. The friction gradually destroys the suddenness of the reduction, and there is only a slight and gradual reduction on the train-line back of the cars cut out.

*Q. What bad effect would follow if the engineer did not continue making a reduction?*

A. The air coming ahead from the back of the train would kick off the head brakes.

*Q. Could these brakes in the back of the train be applied?*

A. Yes, in service but not in emergency.

*Q. Water sometimes collects in cavity 13 (Fig. 5) of the triple. Where does it come from?*

A. It works back from the pump.

*Q. What bad effect will water have in this place?*

A. It is likely to freeze in winter and block the flow of air through the triple.

*Q. What should be done in such a case?*

A. Apply burning waste and when thawed remove the drain plug 26 to remove the water or the trouble will recur.

*Q. What would be the effect of a weak or broken graduating spring?*

A. We would have nothing to stop the triple piston when it reached service position, and it would move on to emergency position.

*Q. If one triple goes into quick action, will the rest go?*

A. Yes, as a sudden reduction is made on the train line through the emergency ports of the triple in this case. This sudden reduction starts the next and that the next and so on.

*Q. Will a weak or broken graduating spring always throw the triples into quick action?*

A. No, only on a short train.

*Q. Why not on a long train?*

A. On a short train, with a gradual train-line reduction, air is drawn from the train line faster than the

auxiliary pressure can get to the brake cylinder through the service port of the slide valve. When the auxiliary pressure is enough greater than that in the train line, it forces the triple piston to emergency position, as there is no graduating spring to stop it.

On a long train, it takes longer to make a corresponding reduction on account of the larger volume of air in the train line. This gives the auxiliary pressure longer to pass into the cylinder, and as a result the train-line and auxiliary pressures keep about equal and the triple piston will not move to emergency position unless a sudden reduction is made.

*Q. How many air cars must there be in a train so that a broken or weak graduating spring will not affect the service application?*

A. Usually not less than six or seven; with more than this number, if otherwise the triples work properly, the graduating springs could be removed from all triples and no bad effect be noticed.

*Q. What two things will cause the triples to go into quick action regardless of the length of the train?*

A. A sticky triple or a broken graduating pin. (The one which fastens the graduating valve to the piston stem as shown by the dotted lines, Fig. 5.)

*Q. Why will a sticky triple throw the brakes into emergency?*

A. Because the triple does not respond to a light reduction. When it does move, it jumps, and the sudden blow compresses the graduating spring and the triple is in the quick-action position. This car starts the rest as before explained.

*Q. Why will a broken graduating pin throw the brakes into emergency?*

A. Because with this pin broken there is nothing to move the graduating valve from its seat when the triple piston moves and the auxiliary pressure is acting to hold it on its seat. When a train-line reduction is made and the triple assumes service position, no air can leave the auxiliary and pass through the graduating or service port of the slide valve, as the graduating valve is on its seat. When sufficient train-line reduction has been made so that the graduating spring cannot withstand the auxiliary pressure acting on the piston, the triple goes to the quick-action position, and we get the quick action on this car and consequently on the rest as before explained.

*Q. Which of these three troubles—weak graduating spring, broken graduating pin or sticky triple—will usually be found to exist if the brakes go into emergency with a service reduction?*

A. A sticky triple, and this usually means that the triple causing the trouble has had poor care.

*Q. Shall we get the same result regardless of the location of the faulty triple in the train?*

A. Yes; if one starts, all do.

*Q. What is the probable trouble with a brake which, when set in service, will sometimes remain set and sometimes release?*

A. A dirty slide valve which sometimes seats properly and at others not; in the latter case auxiliary pressure escapes to the atmosphere through the exhaust port and allows train-line pressure to force this triple to release position.

*Q. How may this defect be remedied?*

A. Remove the triple piston and attached parts, clean carefully, loosen the packing ring without removing and rub a little oil on the slide valve with the finger.

*Q. Why not pour on the oil?*

A. Too much oil is bad, as it collects dust, which with the oil forms gum. This causes a triple to stick.

*Q. What effect will a leak in the train line have if the brakes are not set?*

A. It will simply cause the pump to work to supply it.

*Q. What effect if the brakes are set?*

A. It will cause them to leak on harder.

*Q. Will the leak cause only the brake on that car to leak on, or all?*

A. All, as the train line is continuous through the train.

*Q. What effect will a leak in an auxiliary have if a brake is released?*

A. It will keep the pump at work the same as a train-line leak.

*Q. What effect if the brakes are applied?*

A. It will leak the brake off on the car where the leak is and then, drawing air from the train line through the feed ports, it will gradually set the other brakes tighter.

*Q. There are a number of leaks in the triple which will cause a blow at its exhaust port. Name the two most likely to produce this effect.*

A. A leaky slide valve or a leaky rubber-seated valve (Fig. 5).

*Q. How can we tell which of these is causing the trouble?*

A. As the exhaust port on the slide valve is always in communication with the atmosphere, whether the

brakes are applied or released, a leak on the face of the slide valve will cause a constant blow.

*Q. How else can we tell if it is the slide valve that causes the trouble?*

A. Apply the brake, and if auxiliary pressure is leaking away across the slide valve, the brake will generally release.

*Q. How can we tell if the trouble is with the rubber-seated valve?*

A. The rubber-seated valve will cause a blow at the exhaust only when the brake is released.

*Q. Why?*

A. The rubber-seated valve 10 (Fig. 5) leaking will allow the pressure to leave cavity *Y*. The train-line pressure then raises check 15 and passes through cavity *Y* across the rubber-seated valve, through cavity *x*, ports *c* and *r*, into the exhaust cavity *n* of the slide valve and out to the atmosphere through port *p*. When the brake is applied, port *n* in the slide valve is closed to port *r*, consequently the blow stops.

*Q. Where does the air which is leaking across the rubber-seated valve go after the brake is applied?*

A. Direct to the brake cylinder through *c*, and this brake continues to set harder.

*Q. Why is a leaky rubber-seated valve more likely to slide the wheels on a car in a long train than in a short one?*

A. After the brakes are applied, this leak allows the train-line and brake-cylinder pressures to equalize. With a long train line there is a much greater volume of air, and these pressures will equalize higher.

*Q. How else can we tell if the rubber-seated valve leaks?*

A. Turn the cut-out cock in the cross-over pipe from the train line to the triple after everything is charged: if the rubber-seated valve leaks, it will draw air from the train line; with the cut-out cock closed, this leak is not being supplied, and the reduction will cause the brake on this car to apply.

*Q. Give another symptom which indicates a leaky rubber-seated valve.*

A. The leak above the check 15 caused the check to rise to supply it, and when the cavity is again charged the check closes. It sometimes rises and closes so fast as to make a loud buzzing sound.

*Q. What is usually the cause of leaking in a rubber-seated valve?*

A. Dirt on the seat, a poor seat caused by wear, the use of oil on the quick-action part of the triple, or using too much oil in the brake cylinder, which will work into the triple and cause the rubber to decay.

*Q. If dirt is the source of the trouble, how may it be removed without taking the triple apart?*

A. Set the brake by opening the angle cock after closing the cock at the other end of the car. If there is dirt on the valve, it may be blown off in this way.

*Q. What besides the slide and rubber-seated valves will cause a blow at the exhaust port of the triple?*

A. Gasket 14 (Fig. 5) leaking between *e* and cavity *X*, or the gasket leaking between the brake cylinder and auxiliary where the triple is bolted to the cylinder. On freight equipments there is a pipe which runs inside the auxiliary to the brake cylinder; this pipe leaking will also cause a blow.

*Q. Are these leaks common?*

A. On the contrary they are very uncommon. The blow is almost invariably due to a leaky slide or emergency valve.

*Q. What effect would the leaking of graduating valve 7 (Fig. 5) have?*

A. The action produced by such a leak is uncertain and depends greatly on the conditions connected with it. When the brake is applied, the triple assumes lap position after the auxiliary pressure is a trifle less than that in the train line. If the graduating valve leaks, the auxiliary pressure gradually reduces, and the train-line pressure forces the triple piston and slide valve back until the blank on the face of the slide valve between ports *z* and *n* is in front of port *r*. If the graduating valve does leak, no more air can leave port z in this position, and the slide valve stops. This blank space is only a trifle wider than port *r*, so if the valve is in good condition and works smoothly, the brake should not release; but if it works hard, it is likely to jump a little when it moves, and open the exhaust port.

*Q. Give a rule by which to tell how a leaky graduating valve will act.*

A. If the triple is in proper condition, a leaky graduating valve should not release a brake. If the triple is a trifle sticky, a brake is likely to be released. A leaky slide valve or a slight auxiliary leak in combination with a leaking graduating valve will release a brake. The action also depends upon the condition of the triple-piston packing ring which if comparatively loose will permit train-line pressure to feed into the auxiliary reservoir as fast as its pressure escapes. If train-line and auxiliary pressures remain equal, the triple-piston is not affected, and the leakage by the graduating valve would not release the brake.

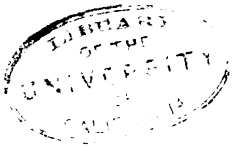
LIBRARY
OF THE
UNIVERSITY

## WESTINGHOUSE FREIGHT EQUIPMENT.

*Q. Name the different parts of the equipment.*

A. 3 (Fig. 11) is the piston sleeve and head, 9 the release spring, 4 the front cylinder head, 2 the cylinder body, *A* the leakage groove, 7 the packing leather, 8 the expander ring, 6 the follower plate which holds the packing leather 7 to its place, *B* the pipe connecting the triple valve and brake cylinder, and 15 the gasket which makes a tight joint between the auxiliary, triple, and pipe *B* leading to the brake cylinder.

*Q. Explain the use of the release spring 9 (Fig. 11).*

A. When the brake is applied, air is put into the cylinder 2 through pipe *B*, and the piston 3 is forced to the left, compressing the release spring. When the air is released from the brake cylinder, the duty of the release spring is to force the piston to release position as shown in the illustration.

*Q. What enters the sleeve 3 (Fig. 11)?*

A. The push rod through which the braking power is transmitted to the brake rigging.

*Q. Of what use is the expander ring 8?*

A. To keep the flange of the packing leather 7 against the walls of the cylinder. The expander ring is a round spring.

*Q. Of what use is the packing leather 7?*

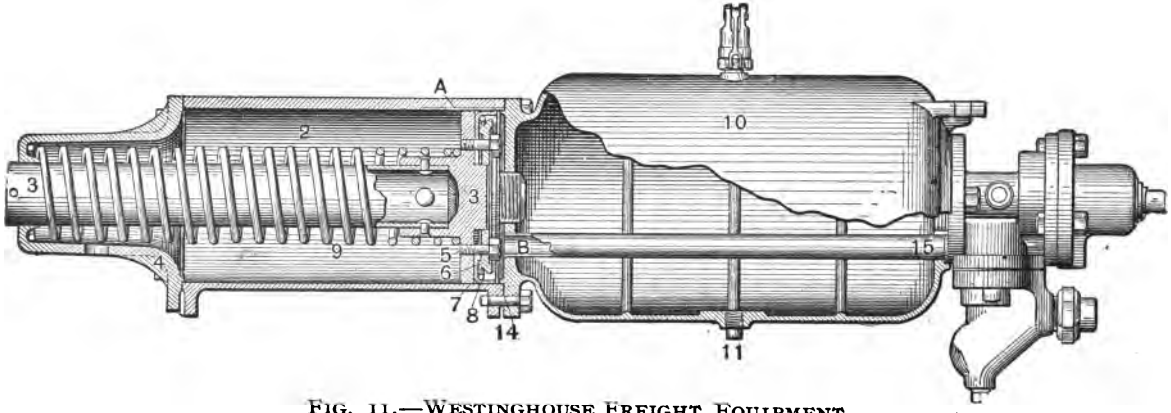


FIG. 11.—WESTINGHOUSE FREIGHT EQUIPMENT.

A. As air enters the brake cylinder, the flange of the packing leather is forced against the walls of the cylinder, thus making a tight joint to prevent the passage of the air by the piston and out to the atmosphere through the open end of the cylinder at the left. If the leather leaks, the brake will leak off.

*Q. Of what use is the leakage groove A (Fig. 11)?*

A. The piston as shown in the cut is in release position. If on a long train there should be any leak on the train line that would draw a triple piston out far enough to close the exhaust port in the slide valve, and there were a leak into the brake cylinder, the pressure would gradually accumulate and force the piston out, causing the shoes to drag on the wheels were it not for the leakage groove. This will allow any small leakage into the brake cylinder to pass through the groove and out of the other end of the cylinder to the atmosphere.

If the brake connections are taken up so short that the piston will not travel by the leakage groove when the brake is set, the air will blow past the piston through the groove and release the brake on this car. In this case, were it not for the groove, the wheels would be slid.

*Q. What is the duty of the pipe B?*

A. When the brake is applied, air passes from the auxiliary through the triple and pipe *B* to the cylinder.

When the brake is released, air passes from the cylinder through pipe *B*, the triple exhaust port and out to the atmosphere, or, if a retainer is used, it passes from the triple into the retainer pipe, which is screwed into the triple exhaust, and out of the retainer according to the position of its handle.

*Q. Of what use is the auxiliary 10 (Fig. 11)?*

A. This is where the supply of air is stored with which to apply the brake on this one car.

*Q. What is the valve on top of the auxiliary?*

A. It is called the release valve. By lifting on the handle of this valve the pressure in the auxiliary 10 may be released. If this valve leaks, after the brake is applied, the reduction of auxiliary pressure thus made will release the brake.

*Q. What use has the plug 11?*

A. To drain off any accumulation of water in the auxiliary.

*Q. What harm will ensue if gasket 15 leaks?*

A. The leak may be from the auxiliary to the atmosphere or from the auxiliary into pipe *B* leading to the brake cylinder. After the brake was applied, the reduction of auxiliary pressure caused by this leak would allow the train-line pressure to force this triple to release position and release this brake. The leak would then draw air from the train line through the triple feed ports, making a train-line reduction that with any other leaks on the train would help to creep on the other brakes.

*Q. Is the freight-car equipment different from the air-brake equipment on the passenger car?*

A. It is smaller, but the principle of operation is the same. In a passenger equipment the pipe *B* does not run through the auxiliary, and the auxiliary and brake cylinder are not fastened together. The appearance is different, but, aside from size, they are alike.

*Q. Why has the oil plug been removed from the brake cylinder?*

A. So that it will be necessary to take the cylinder apart to clean it. Pouring oil into the oil hole is responsible for the ruination of rubber seats in emergency valves.

*Q. How many kinds of freight equipments are there and with what weights of cars are they used?*

A. 6, 8 and 10-inch equipment; 6-inch is used on freight cars the light weights of which are less than 15,000 pounds; 8-inch between 15,000 and 40,000 pounds; and 10-inch when the light weight exceeds 40,000 pounds.

*Q. Fig. 11 shows a standard equipment for freight cars; are they ever furnished in any other form?*

A. Yes; the space limitation on some cars forbids the use of the combined equipment illustrated in Fig. 11. In such cases, what is known as the detached equipment is used, and the brake cylinder and auxiliary reservoir are connected by a suitable pipe.

In very exceptional cases two cylinders are used in connection with one reservoir and one triple valve, but the principle of operation remains the same. The usual piston stroke is twelve inches, but this is reduced to eight inches where twin cylinders are used, and in some special combined and detached equipments.

## PISTON TRAVEL.

*Q. What determines the amount of travel a piston will have?*

A. The slack in the brake rigging and any lost motion in the car brought out by the application of the brake.

*Q. How is the piston travel usually adjusted?*

A. By changing the position of the dead truck levers.

*Q. Which is called the dead lever of a truck?*

A. The one held stationary at the top with a pin.

*Q. What is the other lever on the truck called?*

A. The live lever.

*Q. What is the lever fastened to the piston usually called?*

A. The piston lever.

*Q. What is the corresponding lever at the other end of the cylinder in a passenger equipment called?*

A. The cylinder lever.

*Q. Are these levers ever spoken of differently?*

A. Yes, sometimes both are referred to as cylinder levers.

*Q. In passenger equipment there is sometimes a lever between the cylinder levers and truck levers, one end of which is connected to the hand brake and*

*the other to the live truck lever. What is this lever usually called?*

A. The Hodge, or floating, lever; the latter name is the one more commonly used.

*Q. We have seen in studying the triple valve that a five-pound train-line reduction caused the triple to put five pounds from the auxiliary into the brake cylinder. How much pressure does this give us in the brake cylinder?*

A. It depends upon the piston travel. It may be more or less than five pounds; it might be five pounds.

*Q. Explain this answer.*

A. We notice that the auxiliary is much larger than the brake cylinder, and five pounds taken from the larger space and forced into a smaller will give a greater pressure than that put in; but it must be remembered that a small part of the air put into the cylinder goes through the leakage groove before the piston gets by and closes it. There is still another point. If no air were put into the brake cylinder and the piston were pulled out when the exhaust port was closed, a vacuum would be formed. When the air enters the cylinder it must first fill this space to atmospheric pressure before a gauge placed on the cylinder would begin to show any pressure. The longer the travel, the more air it would take to fill the space and the less pressure there would be for the five pounds put into it.

*Q. Which would give a higher pressure for a given reduction, long or short piston travel?*

A. Short travel.

*Q. Why?*

A. Because with a short travel the same amount of air would be expanded into a smaller space.

*Q. With the freight equipment how much brake-cylinder pressure do we get for a seven-pound train-line reduction with a 6 and a 9-inch travel?*

A. Referring to the table we see that we get seventeen and one-half pounds with the 6 inch, and eight pounds with the 9-inch travel.

| TRAIN PIPE REDUCTION. | PISTON TRAVEL AND RESULTANT CYLINDER PRESSURE * | | | | | | | |
|---|---|---|---|---|---|---|---|---|
| | 4 | 5 | 6 | 7 | 8 | 9 | 10 | 11 |
| 7 | 25 | 23 | 17½ | 13 | 10½ | 8 | PISTON NOT ENTIRELY OUT. | |
| 10 | 49 | 43 | 34 | 29 | 23½ | 19½ | 17 | 14 |
| 13 | 57 | 56 | 44 | 37½ | 33 | 29 | 24 | 20 |
| 16 | . . | . . | 54 | 47½ | 41½ | 35 | 29 | 24 |
| 19 | . . | . . | . . | 51 | 47 | 40 | 36½ | 32 |
| 22 | . . | . . | . . | . . | 50 | 47½ | 44 | 39 |
| 25 | . . | . . | . . | . . | . . | . . | 47 | 45 |

*Air Brake Men's 1896 Proceedings.

The above table is the result of tests made with a freight equipment. Each result is the average of several tests, and the brake was in good condition. There are two spaces where it says "Piston not entirely out," where no brake-cylinder pressure is given for a seven-pound train-line reduction. This does not mean there was no pressure there, as there must have been or the piston could not have gone out and compressed the cylinder release spring. The ordinary air gauge does not register any pressure less than five pounds, and with a seven-pound train-line reduction the pressure gotten in a ten- or eleven-inch piston travel is less than five pounds.

Seventy pounds train-line pressure was used in making these tests.

*Q. With a sixteen-pound reduction?*

A. Fifty-four pounds with the 6 inch, and thirty-five pounds with the 9 inch.

*Q. With a twenty-two-pound reduction?*

A. After the sixteen-pound reduction, the brake did not set any harder on the 6-inch travel because the auxiliary and brake-cylinder pressures equalized at that point, and this brake was full set. With the 9-inch travel the air from the auxiliary had 4 inches more space into which to expand, and the brake was not full set until a twenty-two-pound reduction had been made, giving forty-seven and one-half pounds brake-cylinder pressure.

*Q. What does this show?*

A. That a brake with a short piston travel is more powerful than one with a long travel; that a brake with the auxiliary and brake-cylinder pressures equalized cannot be applied any harder by a further reduction of train-line pressure, and that if piston travel varied in a long train, between 4 and 11 inches, there would be no uniformity in the braking power applied in the different parts of a train.

*Q. What would be the pressure, with the travel as given in the table, were the brakes set in emergency?*

A.

| 4 in., | 5 in., | 6 in., | 7 in. | piston travel. |
|---|---|---|---|---|
| 62 | 61 | 59½ | 58½ | emergency pressure. |
| 8 in., | 9 in., | 10 in., | 11 in. | piston travel. |
| 57½ | 56½ | 55½ | 55 | emergency pressure. |

*Q. Why do the brakes set harder with the quick-action triple in emergency than in service?*

A. Because in the emergency application the quick-action triples put air from both the auxiliary and train line into the brake cylinder.

*Q. Can full emergency pressure be obtained after having made a light train-line reduction in service application?*

A. No.

*Q. Can any gain be made?*

A. Yes, if the reduction has not been too great. By referring to the table we see that a thirteen-pound reduction sets a 4-inch travel brake in full. If emergency were now used this brake would not set any harder, while we might gain a little on the long travel. With a given train-line reduction, we would gain most on the car with the long travel, but on neither would we get full emergency pressure.

*Q. Can a train be handled smoothly with uneven travel throughout the train?*

A. Not as smoothly as when the travel is more uniform.

*Q. What will be the effect with short travel at the head of the train and long at the rear?*

A. Having more braking power at the head would cause the slack to run ahead, causing a jar.

*Q. What if the short travel were at the rear of the train?*

A. The tendency would be for the slack to run back and break the train in two, especially if the train were on a knoll.

*Q. How else would the piston travel affect the smoothness of the braking?*

A. In releasing the brakes.

*Q. Suppose we had a train half of which had 4-inch travel and the other half 9 inch, which brakes would start releasing first if the engineer had made a ten-pound train-line reduction and then, wishing to release the brakes, increased the train-line pressure?*

A. They should all start about the same time, but

the tendency is always for head brakes to start releasing first if the travel is about alike, as the air enters the train line from the main reservoir at the front of the train, and the pressure is naturally a little higher here when recharging.

*Q. Is the same true after a thirteen-pound reduction?*

A. Yes.

*Q. After a twenty-two-pound reduction?*

A. No; the long travel brakes will start releasing first.

*Q. Why?*

A. Referring to the table we see that the 4-inch travel was not applied any harder after a thirteen-pound reduction had been made; but the 9-inch travel continued applying harder until a twenty-two-pound reduction of train-line pressure had been made. With the brakes full set we have fifty-seven pounds pressure in the auxiliary and cylinder of the 4-inch travel car and forty-seven and one-half on the long. Train-line pressure has to overcome auxiliary pressure to force the triple pistons to release position, and it is easier to overcome forty-seven and one-half than fifty-seven pounds; hence the triple piston on the long travel car will go to release position with less of an increase of train-line pressure than will the triple on the short travel car.

*Q. State the general rule in regard to this question.*

A. If reductions have not been continued after cars with the short piston travel have been full set, all brakes should start releasing about the same time; but if the reductions of train-line pressure are continued after the short travel brakes are full set, an increase of train-line pressure will start the long travel brakes releasing first.

*Q. If a long and a short travel brake are started releasing at the same time, which will get off first and why?*

A. The short travel, because the piston has a shorter distance to go and there is a less volume of air to be gotten rid of through the exhaust port of the triple.

*Q. We have two cars with the same piston travel. What is the trouble if both are started releasing at the same time and one gets off quicker than the other?*

A. The release spring in one cylinder is weaker or the cylinder corroded.

*Q. What harm would it do to take a piston travel up to 2 inches?*

A. The piston could not get by the leakage groove, and the brake would not stay set.

*Q. What harm would it do to let the travel out to 13 inches?*

A. The piston would strike the head, and we would have no brake on that car.

*Q. Does having very long piston travel in a train require any more work of a pump in descending grades?*

A. Yes; the air has to be used more expansively, and the pump will have to supply more air in recharging.

*Q. If we try the piston travel on a car when standing, will we find it to be the same as when running?*

A. No.

*Q. Why not?*

A. For several reasons: the shoes pull down farther on the wheels when running; the king bolts being loose allow the trucks to be pulled together; spring in brake beams, loose boxes in jaws, loose brasses on journals, the give in old cars, and any lost motion that will throw slack into the brake rigging; all these will cause the piston travel while running to be greater than that while standing.

*Q. If the piston travel is adjusted when a car is loaded, will it remain the same when the car is light?*

A. It will, if the brakes are hung from the sand plank, but most brakes are hung from the truck bolster or the sill of the car. When the car is loaded, the truck springs are compressed and the shoes set lower on the wheels. When the car is unloaded, the truck springs raise the bolster and car body, thus raising the shoes so that there is less clearance between the brake shoes and wheels. This shortens the piston travel, as the piston does not have to travel so far to bring the shoes up to the wheels.

*Q. How could you tell the piston travel on a car if it had no air in it?*

A. This can be told on freight cars where the hand brake and air brake move the push rod in the cylinder in the same direction when applying the brake. To tell the travel, shove the push rod into the cylinder until it bottoms. Make a mark on the push rod and set the hand brake. The distance the mark on the push rod has moved will be, approximately, the piston travel when using air.

*Q. How much variation is permissible?*

A. The smaller the amount of variation the better, but in road service it is the aim to keep piston travel between 5 and 8 inches.

*Q. Is there any device which will keep a constant piston travel on a car without any outside aid?*

A. Yes, a slack adjuster.

*Q. What slack adjuster is in most general use?*

A. The American slack adjuster.

*Q. Is this better than a hand adjustment?*

A. Yes, because it does its work when the car is in motion, and true travel is had because all lost motion is brought out when the car is in motion.

*Q. What is the most satisfactory travel for general use?*

A. Between 6 and 7 inches.

*Q. Where would a moderately long travel be considered better than a short one?*

A. In a practically level country where, with short travel and a large number of air cars in a train, the train might be slowed up or stopped with a light train-line reduction, thus causing too frequent releases.

*Q. What harm would a too short travel do?*

A. The piston might not get by the leakage groove, and the shorter the travel the more danger of sliding the wheels on account of the greater braking power developed. A too short travel does not give sufficient shoe clearance, and causes a train to pull hard if the brake shoes drag.

*Q. On most passenger cars piston travel can be taken up by winding up the hand brake a little, as the two brakes work in opposition to each other. Is this a good practice?*

A. No; it is the act of a lazy workman, and is dangerous.

*Q. How is it dangerous?*

A. If the brake is set quickly, it is likely to snap the brake chain, and if a passenger had hold of a hand brake wheel when the brake was applied, if the dog were not caught, the wheel flying round might break his hand or arm.

*Q. If the hand brake on a car works with the air (Fig. 90), and the air brake was applied, what would result if the hand brake were then applied?*

A. The braking power developed would be too much for the safety of the wheels, rods, etc., since the resultant braking power is equal to the sum of the power of both brakes.

*Q. If the air brake were then released what difficulty would be experienced?*

A. Since the hand brake retains all of the power of both brakes it would be a very difficult matter for the brakeman to release the brake.

*Q. With this kind of a brake what would result if the hand brake were first applied and then the air?*

A. If the air brake were more powerful than the hand brake, slack would be thrown into the hand brake chain, and the gain in power would be the excess power of the air over that of the hand brake. If the air power were not as strong as that of the hand no effect would be produced since the pull in the hand brake rod would be diminished an amount equal to the power of the air.

*Q. If the hand and air worked opposite, that is, they tended to move the push rod in opposite directions to apply the brake (see Fig. 91), what effect would be produced if the air brake was applied and then the hand brake?*

A. The air brake fully applied is usually stronger than the hand brake, hence the pull on the hand brake rod due to the air pressure would be greater than could be exerted by the brakeman, and the brake wheel could not be turned after the slack in the brake chain had been taken up. Under these conditions no braking power could be gained by using the hand brake.

*Q. If the hand brake were first applied and then the air what would be the result?*

A. Applying the hand brake took up all the slack in the brake rigging and forced the push rod and piston in as far as they could go. When air from the auxiliary passed through the triple valve to the brake cylinder it would pass through the leakage groove to the atmosphere and simply the power of the hand brake would remain. The clearance in the cylinder being very small would result in a very high pressure when the air first entered, thus tending to strain the rods and brake-chain, but the air would quickly escape as explained.

*Q. Which is the better brake from the standpoint of danger to the brakemen?*

A. The one in which both work together. If, where the brakes work opposite, a man is using the hand brake at the same time the engineer uses the air, or an air hose bursts, the air power will turn the brake-wheel in the opposite direction tending to throw the brakeman from the train.

*Q. If the cars of a train are equipped with air and hand brakes working together, and the train was being controlled by air, what could be done if the engineer lost control of the train?*

A. The engineer could call for brakes and without releasing the air, the crew could add the power of the hand brakes to that of the air.

*Q. What would have to be done in a case like this if the hand and air brakes worked opposite?*

A. After calling for brakes it would be necessary for the engineer to make a release before the crew could apply the hand brakes, since if this were not done and the hand brakes were applied, any leakage of brake cylinder pressure would allow the piston to move in, thus throwing slack into the brake rigging and releasing the hand brake.

*Q. How about leaving cars on a grade if the air brake is applied?*

A. If the hand and air work together, the hand brake can be applied without first releasing the air and it will remain set after the air leaks off. If the brakes work opposite, it is necessary to bleed the car before applying the hand brake; if this is not done, the release of the air brake by leakage will also release the hand brake and the car will run away.

To be on the safe side it is best, as a general rule, to always release the air on one car at a time and apply the hand brake, when leaving a car or train on a grade; but this would not be necessary, from the standpoint of safety, if all brakes worked together.

*Q. Are most brakes designed to work together or opposite?*

A. A large majority of freight car brakes are designed to work together, while in passenger service the opposite is true; but the importance of this question will result eventually in practically all brakes being designed to work together.

## THE AMERICAN BRAKE SLACK ADJUSTER AND PISTON TRAVEL REGULATOR.

*Q. Name the different parts of the American Brake Slack Adjuster shown in Fig. 13?*

A. 11 is the cylinder; 19, the packing leather held in position by the expander ring and follower; 22, the pawl; 23, the pawl spring; 21, the piston spring; 24, the cylinder head and casing; and 27, the ratchet nut.

*Q. Name the parts shown in Fig. 12?*

A. 1 is the ratchet nut; 2, the cylinder; 3, the cylinder head and casing; 4, the adjuster screw; *a*, the port which connects pipe *b* with the inside of the cylinder; and *b*, a pipe connection from the slack adjuster cylinder with port *a* of the main cylinder.

*Q. What is the object of the lug a (Fig. 13)?*

A. As illustrated in Fig. 13, its object is to lift the pawl out of the ratchet nut (27) when the adjuster piston is in release position. In the position shown the ratchet nut can be turned by hand to take up or let out slack when necessary, as when applying new brake shoes.

*Q. Explain the operation of the adjuster?*

A. In Fig. 13 it is shown in the normal or release position. If there is sufficient slack in the brake rigging, so that the piston in the large cylinder (Fig. 12) uncovers port *a* when the brake is applied, cylinder pressure will pass through port *a*, pipe *b*, and into cylinder 11 (Fig. 13). The piston will be forced out,

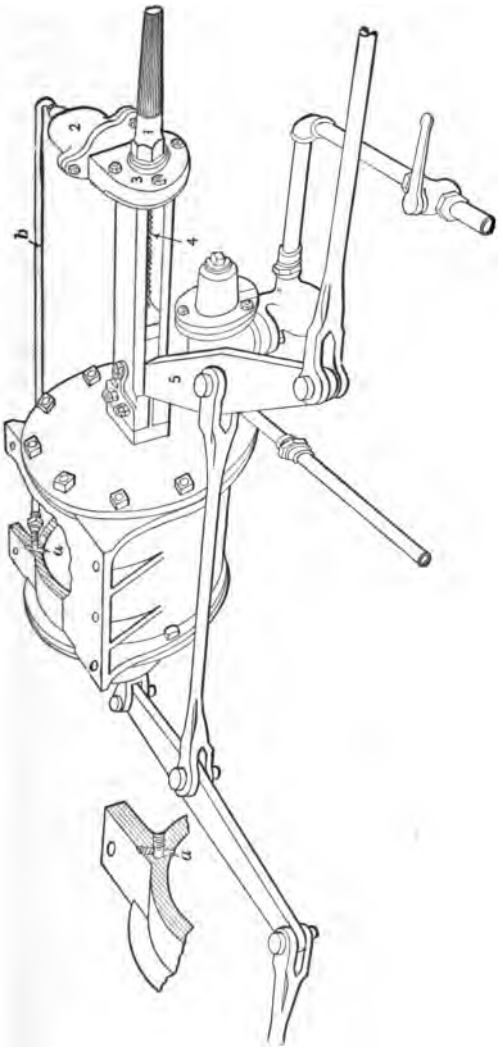


FIG. 12.—SHOWING APPLICATION OF AMERICAN BRAKE SLACK ADJUSTER TO A PASSENGER CAR EQUIPMENT.

compressing piston spring 21. The movement of the piston disengages pawl 22 from lug *a*, and pawl spring 23 causes the pawl 22 to engage in the teeth of the rachet nut.

When the brake is released and the piston in the brake cylinder is forced to release position by the release spring, port *a* is connected with the non-pressure end of the cylinder, hence the air in the slack adjuster cylinder passes through pipe *b* (Fig. 12), port *a*, and out to the atmosphere through the non-pressure head.

When the air is released from the slack adjuster cylinder the piston spring 21 forces the piston back and it in turn, through the pawl, turns the rachet nut which draws the screw away from the cylinder. Lever 5 (Fig. 12) is fastened to a crosshead attached to the adjuster screw, hence the lever is moved correspondingly, the effect of which is to draw all the brake shoes nearer to the wheels.

*Q. How does this shorten the piston travel?*

A. The shoes being nearer the wheels it will require a less movement of the piston to bring the shoes in contact with the wheels.

*Q. How many teeth does the pawl skip at each movement of the adjuster piston throughout its stroke, and what movement of the crosshead attached to lever 5 (Fig. 12) result?*

A. The pawl usually skips one tooth, engaging the second of the adjuster nut each time. One operation of the adjuster moves the crosshead, connected to the lever, $\frac{1}{32}$ of an inch.

*Q. If the adjuster nut 1 (Fig. 12) is moved one turn, how far will the crosshead attached to the lever 5 be moved?*

A. One-quarter of an inch.

*Q. What is the object in having the crosshead move but 1/32 of an inch for each operation of the adjuster?*

A. When a car is in motion false travel is often produced owing to unevenness of the track and similar causes; if the adjuster should take up all this extra slack the piston travel would frequently be found too short.

*Q. What is the controlling factor in the amount of piston travel to be permitted?*

A. The location of port *a* in the brake cylinder (Fig. 12). It is usually located to obtain an eight-inch "running" travel.

*Q. If the brake is applied when a car is at rest and the piston travel were but six or six and one-half inches, would you decide that the adjuster was not working properly?*

A. No.

*Q. Explain the last answer?*

A. The slack adjuster adjusts the "running" travel at eight inches, and as the "running" is always greater than the "standing" travel, we would expect to find the piston travel shorter when the car was at rest.

*Q. Would the "standing" travel be the same on all cars?*

A. No; this depends upon the total leverage.

*Q. Would the "running" travel be the same on all cars?*

A. Yes.

*Q. To apply new shoes it is necessary to increase the shoe clearance; how is this done?*

A. By turning the ratchet nut 1 (Fig. 12) to the left.

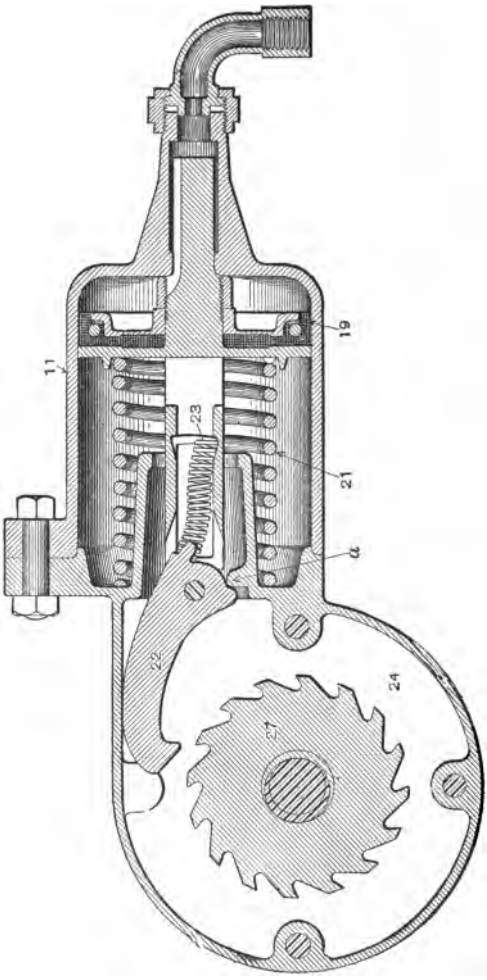


FIG. 13.—SECTIONAL END VIEW OF AMERICAN AUTOMATIC BRAKE SLACK ADJUSTER.

*Q. After the new shoes are applied how may the piston travel be shortened?*

A. By turning the adjuster nut to the right.

*Q. How should we proceed to apply a slack adjuster to a car?*

A. Drill port *a* so that brake cylinder pressure can reach pipe *b* after the cylinder piston has travelled eight inches and erect the parts and piping as shown in Fig. 12, pipe *b* to be copper. The upright part of port *a* (Fig. 14) is drilled with a ⅛-inch drill and the upper portion plugged; the part of the port into which pipe *b* connects is drilled and tapped for ¼-inch pipe. After erecting, test joints with soap suds. Next put on a new set of brake shoes and adjust the piston travel by means of the dead levers, from six to six and one-half inches. The length of the different rods should be such that the dead and live levers will have an inclination so that when the shoes are worn out they will have a corresponding inclination in the opposite direction.

*Q. What is the standard length between centers of holes in the rod connecting the cylinder levers when using the slack adjuster?*

A. 42 inches.

*Q. What is invariably the cause of the piston travel being too short on a car equipped with an American Slack Adjuster?*

A. Either some of the slack has been taken up by the hand brake, or the position of the dead levers has been changed.

*Q. What may occasion the piston travel to become too long?*

A. Pipe *b* may be obstructed, leaks may exist in pipe *b*, or the slack adjuster cylinder, or the packing

leather. The car may have been running some time with the slack partly taken up on the hand brake, a subsequent entire release of which would introduce an amount of slack that it would require some time for the adjuster to take up.

*Q. Is there ever a time when, with the brake released, the rachet nut can not be turned?*

A. Yes; when the crosshead is at the end of its stroke.

*Q. Why can the rachet nut not be turned under these conditions?*

A. With the rachet nut at the end of its stroke, and

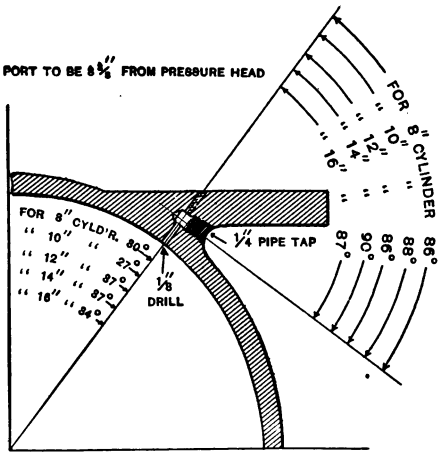


FIG. 14. — SHOWING PROPER METHOD OF DRILLING BRAKE CYLINDERS WHEN USED WITH THE AMERICAN AUTOMATIC BRAKE SLACK ADJUSTER.

the piston travelling beyond the limit, air will operate the slack adjuster piston, causing the pawl to engage a tooth of the ratchet nut, in which position it will remain,

since, the crosshead being at the end of its stroke, the adjuster screw can not be turned.

*Q. How can the pawl be disengaged?*

A. The adjuster is so designed that the crosshead, when at the end of its stroke, is drawn against a set screw next to the cylinder casing 3 (Fig. 12), but not shown in the cut. Removing this set screw permits of a further movement of the crosshead and the usual operation takes place, allowing the pawl to be disengaged. The adjuster nut may then be turned by hand, thus moving the crosshead nearer the large cylinder for the purpose of giving sufficient slack to permit of the application of new brake shoes. The set screw should always be replaced after the pawl has been liberated and the crosshead moved back.

*Q. What might happen if the pawl were caught as just described and, not understanding the function of the set screw, a large wrench were used to turn the ratchet nut?*

A. Some of the teeth might be broken off of the ratchet nut.

*Q. How often should the slack adjuster cylinder be cleaned and lubricated?*

A. About once in six months.

## THE WESTINGHOUSE RETAINING VALVE.

*Q. With what equipments is the retaining valve used?*

A. Throughout the country on freight cars, and on engines, tenders, and passenger cars in mountainous country.

*Q. Why do they not use it on passenger cars in hilly country?*

A. It is not necessary, as the higher braking power used in passenger service is sufficient to run moderate hills with safety.

*Q. Where is it usually located?*

A. Usually at the end, close to the brake standard on freight cars, and at the end about on the level of the edge of the hood on passenger cars.

*Q. Where is it located on cars having vestibules?*

A. On the outside of the vestibule, in which case a special valve is used, the handle of which extends within the vestibule (see Fig. 17).

*Q. To what is it connected?*

A. To the exhaust port of the triple by means of a ⅜-inch or ½-inch pipe.

*Q. What is its use?*

A. To retain fifteen pounds pressure in the brake cylinder to steady the train, and keep its speed from in-

creasing too rapidly while the engineer is recharging the auxiliaries.

*Q. How does the handle of the valve stand when not in use?*

A. Straight down.

*Q. How does it stand when in use?*

A. In the position shown in the cut (Fig. 15).

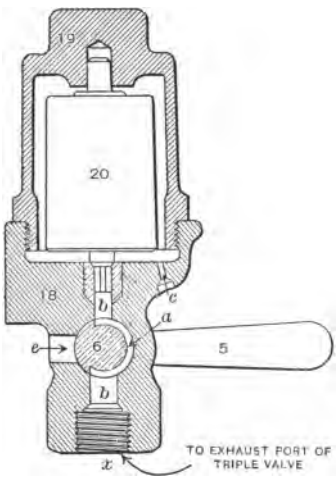


FIG. 15.—PRESSURE RETAINING VALVE.

*Q. If the brake is not applied, can it be set by turning up the retainer handle?*

A. No; the retainer can be used only to hold air in the brake cylinder that has already been put there.

*Q. Explain the passage of the air through the retainer when not in use.*

A. With the retainer handle pointing down, as when not in use, any air coming from the cylinder

would pass through ports *a*, *b*, and out to the atmosphere through port *e*.

*Q. Explain the passage of air through the retainer when in use, as shown by the cut.*

A. When the engineer increases his train-line pressure the triple assumes release position, and the air passing from the brake cylinder has to pass out to the atmosphere through the retaining valve. With the retainer handle turned up, the air passes through port *b* until it strikes the weighted valve 20. Any pressure over fifteen pounds forces this valve from its seat and passes through the restricted port opening *c* to the atmosphere. When the pressure in the cylinder is reduced to fifteen pounds, it is held back by the valve 20.

*Q. What is the size of the small end of port c?*

A. One-sixteenth of an inch in diameter.

*Q. Why is it made so small?*

A. To keep the brake cylinder pressure from escaping to the atmosphere too rapidly after valve 20 is lifted.

*Q. How long will it take the cylinder pressure to reduce from fifty down to fifteen pounds through this retainer?*

A. About twenty or twenty-five seconds, during which time the auxiliaries with an average length of train have become pretty well charged.

*Q. Have all retainers this restricted port c?*

A. No; in some old retainers there are two ports of ¼-inch diameter each.

*Q. Will a retainer hold more pressure with a long or a short piston travel on a car?*

A. It holds the same pressure regardless of the travel. The volume held is greater on the long travel car.

*Q. How do we test retainers?*

A. Have the engineer apply the brakes, and turn up the retainer handles. Then signal the engineer to release, and wait about half a minute, after which walk along and turn down the handles. If a blow accompanies the turning down of the handles, the retainer is working properly, otherwise the pressure has leaked away.

*Q. What troubles would make a retainer inoperative?*

A. A leak in the plug valve operated by the retainer handle; weight 20 (Fig. 15) being gone or dirt on its seat; a split pipe leading from the triple exhaust to the retainer, or a leak in the packing leather in the brake cylinder which would allow the air to escape to the atmosphere.

*Q. What could be the trouble with the retainer if, after the brake was applied and the retainer put in use, no air escaped from it when the engineer increased the train-line pressure?*

A. Port c might be blocked.

*Q. If we wish to use a retainer in descending a grade, should the handle be turned up before or after the brakes are applied?*

A. It makes no difference, if everything is in proper condition.

*Q. Explain a case where it would not be proper to turn up the retainer handle until just before we wish to use it.*

A. If the rubber-seated or the slide valve in the triple leaked, and we turned up the retainer handle, air would accumulate to a pressure of fifteen pounds in the cylinder if the leakage groove were closed, and set the brake on this car. If the train were just pulling over a summit, the brake being on might stall the train.

*Q. Give a rule to produce best results in using the retainer.*

A. In testing retainers while standing, turn up the handles at your convenience before or after the brakes are applied; but when using them on the road, turn them up after the brakes are applied or a short time before wishing to use them.

*Q. Is a retainer ever used except to steady a train when recharging?*

A. Yes; when brakes have been applied too hard, a few are sometimes used to keep the slack bunched after releasing, when drifting along preparatory to making a stop.

*Q. Set a brake with the full service application, then turn up the retainer handle, release and recharge. After charging the auxiliary in full again, make a full service reduction. Will the brake set any harder one time than another?*

A. Yes, it will set harder the second time.

*Q. Why?*

A. When we started to apply the brakes the first time, we had seventy pounds auxiliary pressure and nothing in the brake cylinder. The second time we had seventy in the auxiliary and fifteen pounds in the brake cylinder. By comparison we see that we had more air the second time with which to do our braking, and the pressures will therefore equalize higher.

*Q. Would we gain more the second time over that of the first with a long or a short piston travel?*

A. With the long, because the retaining valve on the long travel car retains the same number of pounds in the cylinder as on the short one, but a larger volume; having a greater volume the pressures equalize correspondingly higher.

*Q. Do we gain the whole fifteen pounds more the second time over what is obtained the first?*

A. No; we gain from about three to six pounds pressure, according to the piston travel.

*Q. About how much pressure do we get in the brake cylinder for a five-pound train-line reduction?*

A. It varies from seven to eleven pounds with average piston travel. It may be more or less, but this would be a fair average.

*Q. After getting the use of the fifteen pounds that the retainer holds, how much pressure would we then get in the cylinder for a five-pound train-line reduction with an average piston travel?*

A. Between thirty and forty pounds.

*Q. Where a twenty-pound reduction will set a brake in full without the aid of the retainer, how much reduction is necessary with the fifteen pounds it holds to aid?*

A. From twelve to fifteen pounds with fair travel.

*Q. Name another gain after obtaining the use of the retainer.*

A. If we have to apply the brakes in full, it does not take so long to recharge, as the auxiliary and brake-

cylinder pressures equalize higher with the retainer to aid.

*Q. How could we tell if it was safe to turn up a retainer handle before reaching the top of a hill and not have the brakes drag?*

A. Put the hand over the exhaust port and hold it there a few seconds to see if any air is issuing; if not, it is safe to turn up the handle.

TABLE.

| (1) | (2) | (3) | (4) | (5) | (6) | (7) |
|---|---|---|---|---|---|---|
| Piston travel | Emergency | Emergency with Ret. | 5 Lbs. Serv. Reduction | 5 Lbs. Serv. Reduc. with Ret. | Full Service | Full Serv. with Ret. |
| Inches | Lbs. | Lbs. | Lbs. | Lbs. | Lbs. | Lbs. |
| 4 | 62 | 65 | 23 | 59 | 57½ | 61 |
| 5 | 61 | 63 | 19½ | 55 | 55½ | 59 |
| 6 | 59½ | 63 | 13½ | 51 | 53 | 58 |
| 7 | 58½ | 62 | 11½ | 43 | 52 | 57 |
| 8 | 57½ | 62 | 10 | 38 | 50½ | 56 |
| 9 | 56½ | 61½ | 8 | 35 | 48 | 55 |
| 10 | 55½ | 61 | + | 32 | 46 | 54 |
| 11 | 55 | 60 | + | 30 | 45 | 53 |

The above figures were obtained by taking an average of four tests for each condition.

Each test was made with a train-line and auxiliary pressure of seventy pounds.

The first column represents the piston travel.

The second column represents the brake-cylinder pressure obtained in emergency.

The third column represents the brake-cylinder pressure obtained in emergency after the retainer has been used; that is, there was already a pressure of fifteen pounds in the brake cylinder held by the retainer when the emergency was used.

The fourth column represents the brake-cylinder pressure obtained with a five-pound service reduction.

The fifth column represents the brake-cylinder pressure obtained with a five-pound service reduction after once obtaining the use of the air held in the cylinder by the use of the retainer.

The sixth column represents the brake-cylinder pressure obtained with a full service reduction.

The seventh column represents the brake-cylinder pressure obtained with a full service reduction after getting the use of the retainer.

+ simply means that the gauge used registered no pressure less than five pounds. With an 11-inch travel the air is expanded into so large a space that a very small pressure is obtained.

The table should be read from the left to the right.

*Q. What are the retaining valves shown in Figs. 16, 17, 18 and 19?*

A. Figs. 16 and 17 represent valves designed to operate with 12, 14 and 16-inch cylinders. Though slightly different in structure, the operation is practically the same as the one already described.

*Q. Why is it necessary to have two sets of retaining valves for use with 6, 8, and 10; and 12, 14, and 16-inch cylinders?*

A. It is essential in releasing brakes that the pressure in all cylinders be reduced about alike. The ports in the valves for use with 12, 14, and 16-inch cylinders are correspondingly larger than those in the valves for use with the smaller cylinders.

*Q. What is the purpose of the extension handle (Fig. 17)?*

A. This valve is for use on vestibule cars. The body of the valve is located outside the vestibule, but the handle extends within.

*Q. What is the common name for this valve?*

A. The "Pullman Retaining Valve."

*Q What is the difference between this valve and*

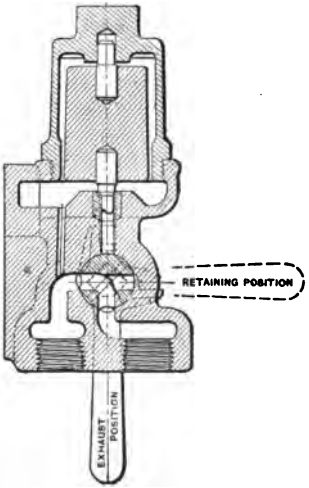


FIG. 16.—RETAINING VALVE USED WITH 12, 14 AND 16-INCH BRAKE CYLINDERS.

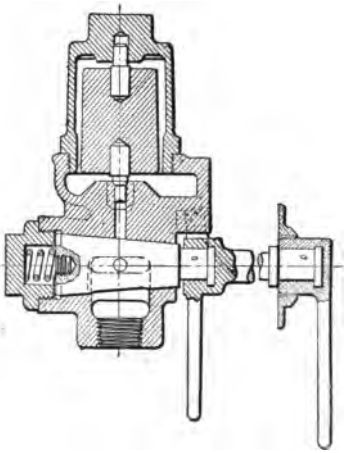

FIG. 17.—PULLMAN RETAINING VALVE, USED ON VESTIBULE CARS.

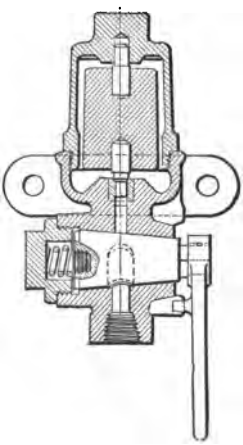

FIG. 18.—STANDARD RETAINING VALVE USED WITH 6, 8 AND 10-INCH BRAKE CYLINDERS.

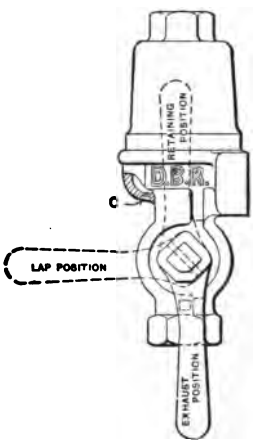


FIG. 19.—DRIVER-BRAKE RETAINING VALVE.

*the corresponding one for use on cars not equipped with vestibules?*

A. The keys are set at right angles to each other in the bodies of the two valves and, as already explained, the "Pullman" valve has an extension handle.

*Q. Is the operation of the two and the results accomplished the same?*

A. Yes.

*Q. How many kinds of retaining valves are furnished by the Westinghouse Company, and what is their use?*

A. Five. The one shown in Fig. 18 is for use with 6, 8, and 10-inch cylinders on non-vestibule cars; practically the same valve, but with an extension handle and key at right angles, is used on vestibule cars. Figs. 16 and 17 represent the corresponding valves for use with 12, 14, and 16-inch cylinders. Fig. 19 is a cut of the Driver-Brake Retaining Valve.

*Q. How does the Driver-Brake Retaining Valve operate?*

A. In the same general way as the other, except that, if so desired, it may be placed on lap, as indicated, in which position no air can escape from the brake-cylinder. When the handle points straight up the usual 15 pounds is retained, when the triple piston is forced to release position.

*Q. For what special use was the Driver-Brake Retaining Valve designed?*

A. For use on freight engines and those hauling long passenger or excursion trains. It furnishes a means, within the control of the engineer, by which the slack of a train may be kept bunched, if desired, when drifting up to a water crane, releasing brakes at slow speeds, and under similar conditions.

## MAIN RESERVOIR.

*Q. Where does the air go when it leaves the pump?*

A. To the main reservoir.

*Q. Where does main reservoir pressure begin and where end?*

A. It begins where the air leaves the pump and ends at the engineer's valve.

*Q. What is the object of the main reservoir?*

A. Its object is to act as a storehouse in which to keep a reserve pressure to throw into the train line to release brakes and recharge auxiliaries. It also acts to collect most of the dirt, oil, and moisture that leaves the pump.

*Q. How much main reservoir pressure is usually carried?*

A. Usually ninety pounds, although more is used in mountainous country, when using the High-Speed Brake, or the High-Pressure Control, or the Duplex Method of Main Reservoir Regulation.

*Q. What size main reservoir is considered proper?*

A. One whose capacity is not less than 40,000 cubic inches for freight, and 20,000 or more for passenger engine.

*Q. How large should any main reservoir be?*

A. In releasing brakes in any service the main reservoir must be large enough so that, when the brakes

are applied and we wish to release them, the main reservoir pressure will equalize with that in the train line, when connected with it, at a sufficiently high pressure to insure the prompt and certain release of the brakes.

*Q. Why is a larger main reservoir necessary in freight than in passenger service?*

A. Because there are a greater number of auxiliaries to charge in freight service and a longer train line to supply.

*Q. When is a large main reservoir with full pressure most essential?*

A. After an emergency application, and especially after a break in two.

*Q. What results are likely to follow the use of small main reservoirs on engines pulling long trains?*

A. A pump is likely to heat, brakes are likely to stick, and we will have a hard handling rotary.

*Q. Why is a pump more likely to heat with a small main reservoir?*

A. Because the smaller the main reservoir, the higher the pressure has to be carried, and the higher the pressure the more is heat generated in compressing the air; therefore the pump is more likely to heat and burn out the packing.

A second reason is that with a small reservoir, when releasing brakes, the pump has to work faster to charge the auxiliaries before the speed of the train increases too much. The pump working very fast does not have time to take in a full cylinder of air each stroke. The pump then has to make more strokes to compress the same amount of air, than it would were it working more slowly.

*Q. State the gains made by using a large main reservoir.*

A. Pressure in the main reservoir and train line will equalize higher when releasing, auxiliaries will be charged more quickly, the pump is not so likely to heat, and, not working so rapidly or against so high a pressure, will not wear out so fast, and the brakes are not so likely to stick.

*Q. What should be the location of a main reservoir?*

A. If possible, at the lowest point in the air-brake system.

*Q. Why?*

A. To have all the dirt and oil possible drained into it and drawn off through the bleed cock.

*Q. Where is the main reservoir usually located?*

A. Between the frames back of the cylinder saddle.

*Q. Should it be located there?*

A. Yes, when it is possible to place there a main reservoir of the regulation size; but the size must not be sacrificed for the position.

*Q. Where else is it sometimes located?*

A. Under the foot-boards of the cab and sometimes on the tank.

*Q. Is it right to locate it on the tank?*

A. Yes, if the requisite volume can be obtained in no other way; otherwise, no.

*Q. Why is it not a desirable position?*

A. Oil and dirt will not drain into it as they should, and when it is so located, two lines of hose have to run between the tank and engine, one to carry the air from the pump to the main reservoir, and the other to bring

the pressure from the reservoir to the engineer's valve. These hose get full of oil and dirt, decay, burst, and in the end prove very expensive.

*Q. How often should the main reservoir be drained?*

A. At the end of each trip.

*Q. Where does this water found in the main reservoir come from?*

A. Most of it is drawn from the atmosphere, and given off as the air cools.

*Q. Does any of the condensed steam from the steam end of the pump leak by the piston rod and then pass into the main reservoir with the compressed air?*

A. A trifle; but this is an inappreciable amount compared with what comes from the atmosphere, especially on rainy days.

The following was taken from the '96 Proceedings of the Air Brake Association. There were four reservoirs, each with a capacity of 12,200 cubic inches, and they could all be used together or cut out at will. The test was made on a twenty-five car train, and shows the advantage of having a large volume of air in the main reservoir to equalize with that in the train line.

| Number of reservoirs cut in. | Initial reservoir pressure in pounds. | Initial pressure in train pipe in pounds. | Pressure equalized at in pounds. |
|---|---|---|---|
| 4 | 100 | 0 | 50 |
| 2 | 100 | 0 | 35 |
| 4 | 100 | 50 | 72 |
| 4 | 90 | 50 | 67 |
| 2 | 110 | 50 | 68 |
| 2 | 100 | 50 | 63 |
| 2 | 90 | 50 | 61 |

*Q. What is generally conceded to be the best practice concerning main reservoirs?*

A. To use two main reservoirs, preferably long and of small diameter, and a cooling pipe of approximately 30 feet between the pump and first reservoir, and also between the first and second reservoirs.

*Q. Why is this done?*

A. Tests have shown that, with these conditions existing, air cools properly before passing the brake valve and no water is found in the train-line, thus doing away with the chance of frozen train pipes.

MAIN RESERVOIR SIZES.

| Inches, outside. | Capacity. |
|---|---|
| 22½ x 34 | about 11,200 cubic inches. |
| 24½ x 34 | " 14,000 " " |
| 26½ x 34 | " 15,800 " " |
| 20½ x 41 | " 12,200 " " |
| 22½ x 41 | " 14,000 " " |
| 24½ x 41 | " 17,400 " " |
| 26½ x 41 | " 20,000 " " |

NOTE.—Main reservoir capacity for passenger engines should not be less than 20,000, and for freight engines not less than 40,000 cubic inches. With a large capacity reservoir the pump may be run slower, it is less likely to heat, the brakes can be released more promptly, a much quicker recharge of the auxiliaries is possible, and so much moisture will not reach the train line. When air, after reaching the main reservoir, is allowed to cool to its initial temperature before being used no moisture is ever found in the train line.

## WESTINGHOUSE ENGINEER'S BRAKE VALVES.

*Q. What was the first form of valve used?*

A. That which was known as the old three-way cock.

*Q. With what equipment was this used?*

A. With the straight air, with the plain automatic, and for a time, by a good many roads, with the quick-action brake.

*Q. What objection was there to it?*

A. It was not sufficiently sensitive, and there was great danger of throwing the brakes into emergency.

*Q. Why?*

A. Because reductions of train-line pressure were made by instinct or sense of sound. An engineer having a short train to-day and a long one to-morrow could scarcely avoid doing poor braking, as his valve was nothing much more than a plug valve. A reduction that was a trifle too heavy would throw the triples into quick action, and on a long train the reduction could not be made too slow, or the air would blow through the leakage grooves in the brake cylinders. If the escape of air from the train line were suddenly checked, the air from the rear rushing ahead had a tendency to kick off some of the head brakes.

*Q. In changing the valve what was the object?*

A. To obtain a valve that would mechanically and

gradually make the desired reduction of train-line pressure regardless of the length of the train.

*Q. Was this done immediately?*

A. No; several forms of valves were made before those now in use.

*Q. What are the ones now in use?*

A. The D 8, D 5, E 6, F 6, and the G 6; the D 5, E 6, F 6, and G 6, aside from the feed valve, are the same, the different letters simply refer to different catalogues issued by the Westinghouse Company.

*Q. Which is the one most in use and the one sent out with all modern equipment?*

A. The G 6 valve.

*Q. What is the difference between the D 5, E 6, F 6, and G 6 Brake Valves?*

A. The first three are all alike and differ from the G 6 in the Feed Valve or Train-line Governor only. The G 6 has what is known as the Slide-Valve Feed Valve, as shown in Figs. 24 and 25.

*Q. What should be the location of an engineer's valve?*

A. Within easy reach of the engineer and far enough from the boiler that the heat will not dry out and crack the gaskets.

## G 6 ENGINEER'S BRAKE VALVE.

*Q. Explain the different parts of the engineer's brake valve.*

A. *X*, *Y*, *T*, *W*, and *R* are explained by referring to Figs. 21, 22 and 23, Plate VI.

31 and 32 are known respectively as upper and lower body gasket.

14 is the rotary valve.

13 a gasket to keep main reservoir pressure from leaking to the atmosphere.

The space above piston 18 is known as cavity *D*; this cavity is connected with the little drum by the pipe 21.

18 is the equalizing piston, 22 the train-line exhaust.

3 and 4 are known as the upper and lower valve body.

There is a tee in pipe 26 just after it leaves the valve, one branch of which goes to the red hand on the gauge and the other to the pump governor.

The other parts need no naming.

*Q. Of what use is the engineer's valve?*

A. To give the engineer complete control of the flow of air.

*Q. How many positions are there for the engineer's valve?*

A. Five.

*Q. Name them.*

A. Full release, running, lap, service, and emergency positions.

*Q. Describe the use of the different positions.*

A. Full release is that used for releasing brakes.

Running position is the one used when running on the road and when the brakes are inoperative.

Lap position is that which blanks all ports in the valve.

Service is the position used when the brakes are to be applied gradually.

Emergency is the position used when the brakes are to be applied suddenly.

*Q. What connections do we have with the valve in full release?*

A. A direct connection between the main reservoir and train-line through a large port and between the main reservoir and cavity *D*, or the little drum, through two small ports.

*Q Explain the flow of air from the main reservoir through the engineer's valve in this position.*

A. In this position the main reservoir pressure enters the valve at *X*, passes through port *A*, port *a* of the rotary 14, port *b* of the rotary seat 3 (Figs. 20, 21 and 23), up into cavity *c* of the rotary and through port *l* into the train-line at *Y*. As the air passes through cavity *c* of the rotary on its way to the train-line, it is free to pass through port *g* (Fig. 21) into cavity *D*. In this position, port *j* of the rotary (Fig. 26) is over port *e* in the rotary seat (Fig. 21) also leading to the little drum, or cavity *D*.

*Q Can main reservoir pressure reach the top of the rotary 14 at all times?*

A. Yes.

*Q. What is the valve shown in Fig. 20?*

A. It is the top portion of the old D 8 Brake Valve, a cut of which is inserted to convey a better idea of the flow of air through the brake valve in release position.

*Q. Does the passage of air through the D 8*

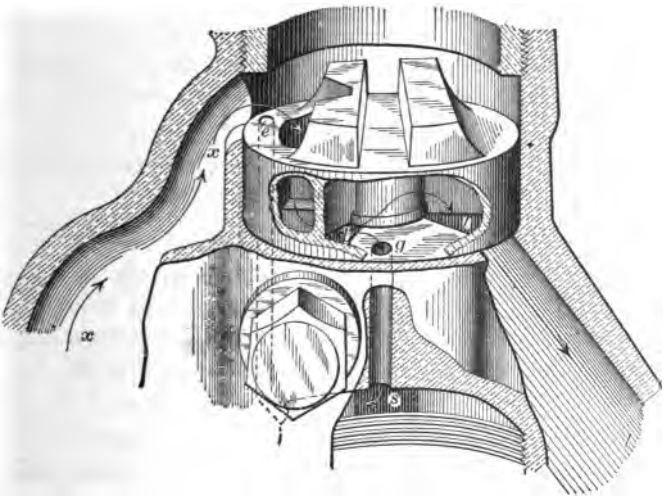

FIG. 20.—SHOWING FLOW OF AIR THROUGH BRAKE VALVE WHEN IN FULL RELEASE POSITION.

*correspond to that of the G 6 Brake Valve in release position?*

A. Although the valves are somewhat different in construction, the flow of air in release position is practically the same in both brake valves.

*Q. How much main reservoir pressure is usually carried except in very mountainous country?*

A. Ninety pounds.

*Q. How much pressure would we get on the main reservoir, the train line and the little drum, were the handle of the engineer's valve to be left in full release position until the pump stopped?*

A. Ninety pounds in each, as there is a direct connection between the three.

*Q. What is the small blow we hear if the engineer's valve is allowed to remain in full release?*

A. It is the escape of main reservoir pressure through the warning port of the rotary into the emergency exhaust (Fig. 23) and out to the atmosphere.

*Q. What is this port and its purpose?*

A. It is a port, one end of which is about as large as a pin. When the engineer hears this blow it means to him that he must be careful or he will get ninety pounds pressure on the train line if he leaves the handle of his valve in full release position too long.

*Q. How much pressure is usually carried on the train line and little drum in country not mountainous?*

A. Seventy pounds.

*Q. How does the engineer prevent a ninety-pound pressure getting on the train line and little drum?*

A. By moving the valve to the second or running position.

*Q. Why do we get only seventy pounds pressure on the train line with the valve in running position?*

A. Because in this position all air passing into the train-line from the main reservoir has to pass through the feed valve (Fig. 22), and this is adjusted to close as soon as there is a seventy-pound pressure on the train-line.

*Q. In running position we have the position of the rotary as shown in Fig. 22. Explain the passage of air in this position.*

A. The main reservoir pressure passes through the ports *j*, *f* and *f* (Figs. 22 and 26) into the feed valve, or train-line governor as it is more commonly called; thence through port *i* (Fig. 23) into port *l* (Figs. 21 and 23) and out into the train-line at *Y*. As the pressure passes through port *l* into the train-line it is also free to pass up into cavity *c* of the rotary, which is still over port *l*, as seen in Fig. 22. Port *g* is still exposed under cavity *c*, and at the same time the air passes through the train-line governor into the train-line, it also passes into cavity *c* of the rotary, port *g* of the rotary seat (Fig. 22) and into cavity *D*, or the little drum.

*Q. The train-line governor closes when there are seventy pounds on the train line with the valve in running position. How much pressure do we get in the main reservoir with the valve in this position?*

A. Ninety pounds.

*Q. What stops the pump when there are ninety pounds on the main reservoir?*

A. The pump governor, which is connected with main reservoir pressure at 26 (Fig. 21).

*Q. Is the pump governor always set at ninety pounds?*

A. No; only in level and hilly country. In mountainous country, it is set much higher, also in level country where exceptionally long trains are handled.

*Q. The red hand on the gauge represents main reservoir pressure, and the black hand is said to represent that on the train line. Is the pipe leading to the black hand connected directly to the train line?*

A. No; it is connected to little drum pressure. (See 21, Fig. 21.)

*Q. Why is it called train-line pressure if not connected to it?*

A. Because in full release or running position port *g* furnishes a direct connection between the little drum and train line, and the pressures must be equal.

*Q. What is the next position to the right of running position?*

A. Lap position.

*Q. How does the air flow with the valve in this position?*

A. There is no passage of the air as all ports are blanked. The rotary is moved around sufficiently to shut off port *j* in the rotary from port *f* in the rotary seat, and a small lug on the inside rim of the rotary also covers port *g*, thus separating the train line from the little drum. In this position the main reservoir, train-line and little drum pressures are each by themselves.

*Q. What is the dividing line between the train-line and little drum pressures in this position?*

A. The equalizing piston 18 (Fig. 21).

*Q. Do we still refer to the black hand as representing train-line pressure on lap, knowing the ports are closed between the little drum and train line?*

A. Yes.

*Q. If there were a leak on the train line, would the black hand fall back if the valve is on lap?*

A. Yes, but slowly.

*Q. Why?*

A. Because in order to have piston 18 work smoothly the packing ring 19 (Fig. 21) must not be absolutely tight. If the train line leaks, the little drum pressure will gradually leak by the packing ring into the train line and equalize with it.

*Q. What would happen if this packing ring were tight?*

A. With the valve on lap all train-line pressure could leak away and the black hand on the gauge would not show it.

*Q. What is the next position to the right of lap?*

A. Service position.

*Q. What is this position used for?*

A. To make a gradual application of the brakes.

*Q. Explain this position.*

A. In this position, a groove *p* (Fig. 27) of the rotary connects port *e* (Fig. 23) leading to the little drum through rotary seat with a groove *h* (Fig. 23) also in the rotary seat; *h* leads into the emergency exhaust *k* (Fig. 23), which is directly connected with the atmosphere as shown by the dotted lines. We then have a direct connection from the little drum to the atmosphere through small ports.

*Q. What is port e called?*

A. The preliminary exhaust port. This hole is bushed, and the bushing has a small taper hole through it.

*Q. In what two positions is it that the preliminary exhaust port e is used?*

A. In the release position and also in the service position.

*Q. What is its use in the release position of the brake valve?*

A. To permit main reservoir pressure to feed down into chamber D above the equalizing piston 18, as shown in Fig. 21, Plate VI.

*Q. What is this port used for in the service position of the brake valve?*

A. It is used to permit the pressure above the equalizing piston, connected with the equalizing reservoir through port *s* to escape to the atmosphere.

*Q. What effect does taking air from the little drum have?*

A. It reduces the pressure on top of piston 18. The pressures were the same on both sides of it, but when the reduction is made from the little drum in service position, it leaves piston 18 with the greater pressure underneath on the train-line side of the piston.

*Q. What effect has this?*

A. The train-line pressure being greater forces piston 18 from its seat and allows train-line pressure to escape to the atmosphere through the train-line exhaust 22 (Fig. 21.)

*Q. How long does piston 18 remain off its seat?*

A. Just as long as the train-line pressure is greater than that in the little drum. When the little drum

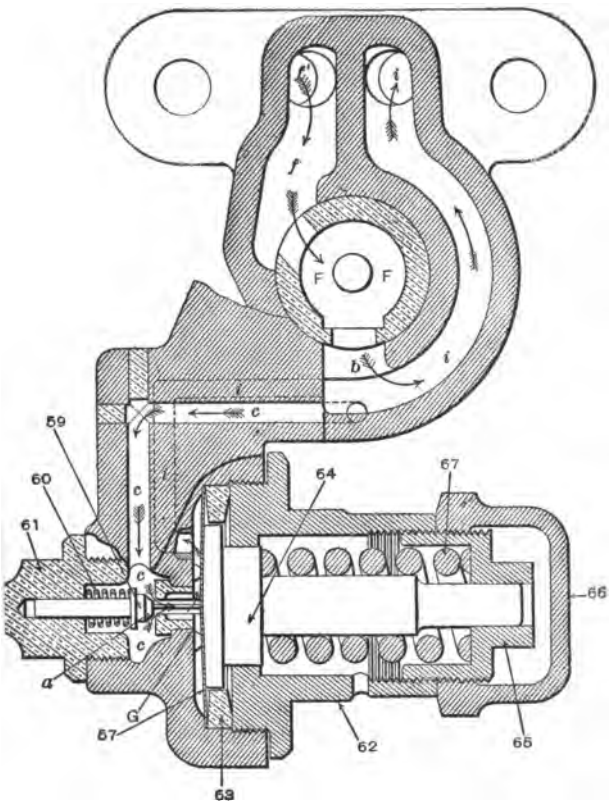


FIG. 25.—SLIDE-VALVE FEED VALVE.

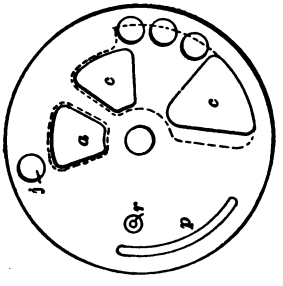

OTTOM VIEW OF ROTARY VALVE.

pressure is a trifle greater than the train line, piston 18 is forced to its seat.

*Q. Do we still speak of the black hand as representing train-line pressure?*

A. Yes.

*Q. How do we know it is the same as that in the little drum to which the gauge pipe leading to the black hand is connected?*

A. Because the equalizing piston will take the same amount of pressure from the train line before it closes that the engineer took from the little drum.

*Q. If the engineer wishes to apply brakes gradually, does he take air from the train line?*

A. No; he takes it from the little drum, and piston 18 takes care of the train line.

*Q. To what else in the brake system is the piston 18 similar in its work?*

A. The triple piston (Plates IV and V).

*Q. What is the next position to the right of service?*

A. Emergency position.

*Q. Explain this position.*

A. The rotary is moved around so that the large cavity *c* (Fig. 27) is directly over the large ports *l* and *k* of the rotary seat (Fig. 23). Air passes from the train line at *l* into cavity *c* and out to the atmosphere through port *k*.

*Q. What is the object of using the large ports?*

A. To get a very sudden reduction on the train line to cause the triple valves to go into quick action.

*Q. Is the reduction necessarily heavy to obtain quick action?*

A. No; it is quick.

*Q. Does the little drum pressure or the equalizing piston play any part in the emergency application?*

A. None whatever.

*Q. In running position when the pump stops we have ninety pounds in the main reservoir and seventy on the train line. What is the difference between the pressure in the main reservoir and the train line called?*

A. Excess pressure.

*Q. What is the use of excess pressure?*

A. It is a reserve power to throw into the train line, when the valve is placed in release position, to force the triple pistons to release position and help recharge the auxiliary reservoirs.

*Q. If the pump were started with the handle of the valve on lap, how much pressure would we get in the main reservoir and how much in the train line?*

A. Ninety pounds in the main reservoir and nothing in the train line.

## WESTINGHOUSE SLIDE-VALVE FEED VALVE.

*Q. What is the object of the Slide-Valve Feed Valve illustrated in Figs. 24 and 25?*

A. To maintain a constant pressure on the train-line when the brake valve is in running position. This valve is now sent out with the Westinghouse Standard G 6 Brake Valve, instead of the old style feed valve, as shown in Fig. 28. It contains greater refinement of and a more positive action than the older form of feed valve, or train-line governor, as it is often designated. It fastens to the same studs as the old valve and is interchangeable. Fig. 24 shows a central section through the supply valve case. Fig. 25 is a central section through the regulating valve and spring box and a transverse section through the supply valve case.

*Q Explain the operation of this valve.*

A. Ports *f* and *i* (Fig. 25) register with the corresponding ports in the brake valve body (Fig. 23); main reservoir pressure can reach the feed valve through port *f* only when the brake valve is in running position. In this position it has free access through *f* and *f* with chamber *F*. Chamber *E*, which is separated from chamber *F* by the supply valve piston 54, is connected with passage *i* and thus with the train-line through passage *c*, *c*, port *a* (controlled by regulating valve 59), and chamber *G* over diaphragm 57. Regulating valve 59 is normally held open by diaphragm 57 and regulating spring 67, the tension of which is adjusted by regulating nut 65. When this valve is unseated chamber *E* is in

communication with the train-line and is subject to this pressure.

When the handle of the brake valve is placed in running position air pressure from the main reservoir enters chamber *F* and forces supply-valve piston 54 forward, compressing spring 58, drawing supply valve 55 with it, thus uncovering port *b*. It thereby gains entrance directly into the train-pipe through ports *i*, *i*. The resulting increase of pressure in the train-line (and in chamber *G* over diaphragm 57) continues until it becomes sufficient to overcome the tension of regulating spring 67, previously adjusted at 70 pounds. Diaphragm 57 then yields and permits the regulating valve 59 to be seated by spring 60, closing port *a* and cutting off communication between chamber *E* and the train-line. The pressures in chambers *E* and *F* now equalize quickly through leakage past supply-valve piston 54, and the supply-valve piston spring 58, previously compressed when the supply-valve was forced to the right, now reacts and forces supply-valve piston 54 and supply-valve 55 to their normal positions, closing port *b* and cutting off communication between the main reservoir and train-line.

*Q. What causes the feed valve to again permit main reservoir pressure to reach the train-line?*

A. A subsequent reduction of train-line pressure, either by leakage or otherwise, reduces the pressure in chamber *G* and permits regulating spring 67 to force diaphragm 57 up, thus unseating regulating valve 59, thereby permitting the pressure accumulated in chamber *E* to discharge into the train-line through ports *c*, *c* and *a*, chamber *G* and port *i*. The equilibrium of pressures upon the opposite faces of supply-valve piston 54 being thus destroyed, the higher main reservoir pressure in chamber *F* again forces supply-valve piston 54, and it in turn draws the supply-valve 55 over so as to expose

port *b*, which again permits the train-line pressure to be restored to a pressure of 70 pounds, or other predetermined amount.

*Q. How can the train-line pressure be changed when using this feed valve?*

A. Remove the cap 66, turn the adjusting nut 65 in, to increase train-line pressure, and out to reduce it.

*Q. What could be wrong if the train-line pressure equalized with that in the main reservoir and this could not be changed by readjusting the tension of the regulating spring 67?*

A. Aside from the causes already explained in connection with the brake valve proper, there might be a leak between ports *f* and *i* in the gasket (Fig. 29), between the feed valve and brake valve proper; dirt on the seat of the supply valve 55, or the regulating valve 59, or a poor seat on either; or the part of the regulating valve stem that rests upon diaphragm 57 being too long. Dirt on diaphragm 57, which would hold regulating valve 59 unseated, would produce the same result.

*Q. What could make the regulating valve stem too long?*

A. By grinding the valve in. After this is done it should be noted that the end of the stem is flush with the projection of the casting upon which diaphragm 57 rests.

*Q. Why would dirt on the seat of the regulating valve 59 cause train-line pressure to become too high?*

A. With dirt on the seat of the regulating valve 59 air from chamber *E*, at the right of piston 54, could escape to the train-line. If it escaped faster than main reservoir pressure could leak by the piston 54, the pressure in chamber *E* would be less than that in chamber *F*, and

the supply valve 55 and piston 54 would be moved to the right, exposing port *b*, which connects main reservoir and train-line pressures, and the train-line would be overcharged.

*Q. What is the object of the brass button at the end of the supply-valve piston spring 58?*

A. As a spring is compressed there is a winding action set up, and a tendency for the spring to turn the piston, and the piston in turn to twist the supply valve from its seat. By the use of the button there is no chance for this action, as a very slight bearing is in contact between the button and piston. The effect of the winding action of the spring on the piston is thus destroyed.

*Q. Name the different parts of the slide-valve feed valve.*

A. 51, the body; 52, the flush nut; 53, cap nut; 54, supply-valve piston; 55, supply valve; 56, supply-valve spring; 57, diaphragm; 58, supply-valve piston spring; 59, regulating valve; 60, regulating-valve spring; 61, regulating-valve cap nut; 62, spring box; 63, diaphragm ring; 64, diaphragm spindle; 65, adjusting nut; 66, check nut; and 67, the adjusting spring.

## FEED VALVE OR TRAIN-LINE GOVERNOR.

*Q. What is the duty of the train-line governor?*

A. To keep any desired pressure on the train line with the handle of the engineer's valve in running position.

*Q. Does it play a part in any other than running position?*

A. No.

*Q. Explain the action of the old style governor with the engineer's valve in running position.*

A. The spring 68 (Fig. 28) supports piston 74, and the piston holds the valve 63 from its seat. As long as the air pressure on top of the piston is less than the tension of the spring 68, valve 63 is held from its seat, and main reservoir pressure coming in through port *f* feeds into port *i* as indicated by the arrow, and on into the train line. When the pressure above the piston is greater than the tension of the spring 68, the piston is forced down, allowing valve 63 to seat.

*Q. How is the train-line pressure regulated?*

A. By screwing up on the nut 70 to strengthen the spring and hold valve 63 from its seat longer to gain train-line pressure, and lowering nut 70 to weaken train-line pressure.

*Q. Of what use are the rubber gaskets 72 and the packing ring 67?*

A. To keep train-line pressure from leaking down through the governor and out to the atmosphere.

*Q. What governor troubles will allow full main reservoir pressure to go through the governor to train line?*

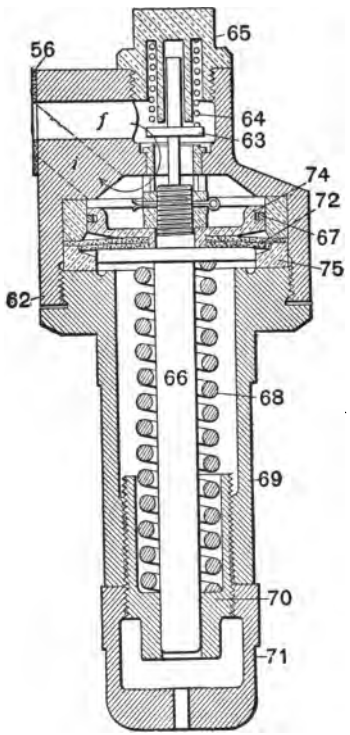


FIG. 28.—FEED VALVE OR TRAIN-LINE GOVERNOR.

A. (1) Dirt or scale on the seat of the valve 63 (Fig. 14).

(2) Spring 68 being screwed up too stiff.

(3) A leak between the holes of the gasket 56 where the governor is bolted to the body of the engineer's valve.

(4) The lower body of the governor 69 being screwed up too tight.

*Q. Explain why the above troubles would prevent the governor from shutting off the main reservoir pressure when the desired amount of train-line pressure had been reached.*

A. (1) Dirt or scale would not allow valve 63 to seat.

(2) Spring 68 being too stiff would hold valve 63 from its seat too long.

(3) The following sketch showing the gasket between the train-line governor and the engineer's valve will explain the third trouble and its effect. The dotted line represents the leak.

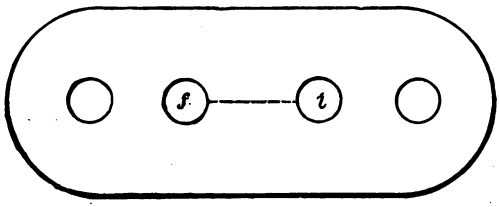


FIG. 29.

(4) The bottom casing 69 being screwed up too tight would crush the rubber gasket 72 at the outer edge. The inside of the gasket, not being injured, would lift the piston so high that valve 63 could not get low enough to seat. In this case the spring 68 could be taken entirely out, and still we could get no excess as our train-line and main reservoir pressures would equalize.

*Q. If we wish to remove valve 63 to clean it when there is a train coupled to the engine, how should it be done?*

A. Turn the cut-out cock in the train line under the engineer's valve and place the handle in service position to remove the train-line pressure between the engineer's valve and the cut-out cock. Then remove nut 65 and valve 63.

*Q. How should valve 63 be cleaned?*

A. With oil. The seat should never be scraped to remove any gum, as it is a lead seat and a scratch would ruin it.

*Q. What should be done before replacing valve 63?*

A. The valve should be moved to running position to blow out any loose dirt or scale.

*Q. Does the valve 63 begin to close before full train-line pressure is reached?*

A. Yes; the spring 68 begins to be compressed a little before full train pressure is reached so that the last few pounds feed more slowly into the train line.

*Q. How would you remove piston 74 if it stuck?*

A. First remove valve 63 as just described, and then replace the cap nut 65. Next remove the lower body 68. Grasp the stem of the piston 66 with the right hand and move the handle of the engineer's valve to running position with the left. The main reservoir pressure coming in will blow out the piston, after which lap the valve. Never drive the piston out by putting a punch on the stem unless the punch is at least as large as the stem.

*Q. In replacing piston 74, what care should be exercised?*

A. To carefully enter the packing ring of the piston into the brass bushing. Never pound it in as something would be broken or sprung.

*Q. With the handle of the engineer's valve on lap, could the train-line governor be removed entirely without losing main reservoir pressure?*

A. Yes; all ports are blocked, and main reservoir pressure could not get through the rotary in this position.

*Q. What harm would a leak by the packing ring 67 and through the rubber gaskets 72 do?*

A. No harm, except what any small leakage of train-line pressure would do.

## THE LITTLE DRUM, OR CAVITY D.

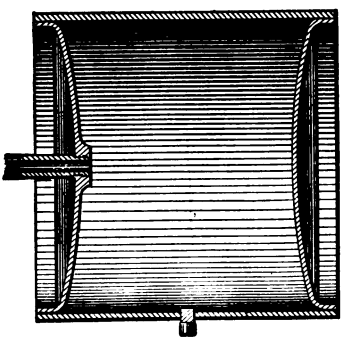

FIG. 30.—THE LITTLE DRUM, OR CAVITY D.

*Q. How else is the little drum, or cavity D, sometimes spoken of?*

A. As the engineer's equalizing auxiliary.

*Q. Where is the little drum usually located?*

A. Under the foot-boards of the cab, on either the fireman's or engineer's side, according to which has the most free space.

*Q. What is the object of the little drum?*

A. To furnish a volume of air on top of the equalizing piston in the engineer's valve.

*Q. Would not the air in the small cavity over*

*the equalizing piston hold air enough to keep the piston on its seat?*

A. Yes; but there is not a sufficient volume there to draw from in making service reductions to make them sufficiently gradual.

*Q. What would happen when the engineer put the handle of the engineer's valve in service position, if there were no little drum to furnish a volume of air on top of the equalizing piston?*

A. The air would leave the top of the piston in a flash on account of the small volume, the black hand on the gauge would fall to the pin, the equalizing piston rise full stroke, all train-line pressure would rush to the atmosphere through the train-line exhaust, and the engineer would have lost control of the brakes.

*Q. How would the brakes on the train act?*

A. If a long train were coupled to the engine, the brakes would go full set in a service application; but if a train of less than about six or seven cars, the brakes would go into quick action.

*Q. Why full service on a long train and quick action on a short one?*

A. On a short train, when the equalizing piston flew up, air from the train line would go to the atmosphere through the train-line exhaust faster than the auxiliary pressure could get from the auxiliary to the brake cylinder through the service port of the triple slide valve. When the auxiliary pressures were enough stronger than that on the train line, they would force out the triple pistons and compress the graduating springs, causing the triples to go into quick action.

On a train of any length the train-line pressure, due to the greater volume on the train line, could not get out of the train-line exhaust any faster than the auxiliary

pressure could feed through the slide valves to the brake cylinders, and the auxiliary pressures would not be strong enough to compress the graduating springs, but, losing all train-line pressure, would apply the brakes in full service application.

*Q. The three-way cock was done away with to get a valve that would mechanically make a gradual desired train-line reduction regardless of the length of the train. What is it about the valve now used that allows this to be done?*

A. The little drum in conjunction with the equalizing piston.

*Q. Does an engineer have to leave the handle of the engineer's valve in service position any longer to make a train-line reduction of five pounds on a long train than on a short one?*

A. No; all little drums are of the same size. If a five-pound train-line reduction is desired, the engineer releases five pounds from the little drum to the atmosphere, and the equalizing piston takes care of the train-line pressure regardless of the length of the train.

*Q. If by any chance the pipe leading to the little drum were broken off, could we still handle the brakes?*

A. Yes.

*Q. How?*

A. Plug the broken pipe and also the train-line exhaust. When wishing to apply the brakes in service, our service position would be of no use as the train-line exhaust is plugged; so move the valve part way into emergency position, being careful not to get it too far into emergency position so as to make too sudden a reduction, and when putting the valve back on lap do not

stop the train-line reduction too quickly or the surge of air forward may release some of the head brakes.

*Q. In such a case, into what have we transformed our efficient valve?*

A. Practically into an old three-way cock.

*Q. How do we tell if the preliminary exhaust port e is free from gum and corrosion?*

A. Place the engineer's valve in service position and watch the black hand on the gauge. It should take about five or six seconds to reduce the pressure in the little drum from seventy to fifty pounds through the preliminary exhaust port.

*Q. What, besides the fact that the preliminary exhaust port is partially closed, would cause it to take longer than six seconds to make this reduction?*

A. See the engineer's valve (Fig. 21). If the gasket 32 leaked between the main reservoir and little drum, or between the train line and little drum, or if the packing ring 19 were sufficiently loose to allow train-line pressure to feed by too quickly.

*Q. If it takes less than five seconds to make this reduction, what is probably the matter?*

A. There is a leak somewhere in the connection to the little drum, which helps make the reduction.

## PECULIARITIES AND TROUBLES OF THE G 6 VALVE.

*Q. What two troubles in the engineer's valve aside from those in the train-line governor would not permit any excess pressure with the handle of the engineer's valve in running position?*

A. A leak in the lower gasket 32 (Fig. 21) between the main reservoir and the little drum and a leaky rotary.

*Q. Why does air leaking from the main reservoir to the little drum in running position not permit any excess pressure?*

A. Because in this position the little drum and train line are directly connected.

*Q. Does gasket 32 leak very often?*

A. No; this is a trouble seldom encountered.

*Q. What indications are given by such a leak?*

A. In service position it would take longer to make a given reduction on the little drum, as air is feeding in slowly at the same time it is being taken out through the preliminary exhaust. As soon as the valve was placed on lap the black hand would quickly feed up to main reservoir pressure.

*Q. If the air were leaking into the little drum by gasket 32 as fast as it was being removed through the preliminary exhaust port, what would happen?*

A. The equalizing piston could not be raised and the only way the brakes could be applied would be by using the emergency position.

*Q. How does the leaking of the rotary do away with excess?*

A. The air from the main reservoir leaks under the rotary seat directly into the train line.

*Q. What harm besides that of destroying excess will result from a leaky rotary?*

A. We get main reservoir pressure on the train line and consequently in the auxiliaries, and the use of ninety instead of seventy pounds for braking purposes would slide the wheels. After the brakes were applied and the valve was on lap, air leaking into the train line from the main reservoir would gradually increase train-line pressure and force triples to release position. Without the proper excess it would also be hard to release brakes.

*Q. How would you test for a leaky rotary?*

A. Start the pump with the valve handle on lap. If the black hand starts, the rotary leaks. Gasket 32 leaking would also cause this, but this leak so seldom happens, it may be disregarded in practice.

*Q. Give another way of testing for a leaky rotary.*

A. Put the valve on lap and drain everything but the main reservoir; open the angle cock at the rear of the tender and put the hose in a pail of water. If bubbles rise to the surface the rotary is leaking.

*Q. Which is the better test?*

A. The second is the more delicate test, but the first is sufficiently practical and is easier.

*Q. Why should everything be drained in making the water test?*

A. Because with all air taken from the train line by opening the angle cock at the rear of the tender, air leaking by the packing ring 19 in the piston 18 into the train line would cause bubbles to rise to the surface of the water. The same thing would result if air from the tender and driver brake auxiliaries leaked by the triple piston-packing rings. The bubbles would seem to indicate a leaky rotary, while it was merely an improperly conducted test.

*Q. Why can we sometimes get no excess with the valve in running position when the engine is alone, although the hands will stand properly at ninety and seventy when the engine is coupled to a train?*

A. It simply means that when coupled to a train the leaks on the train compensate for the leak through the engineer's valve.

*Q. What will cause a constant leak out of the train-line exhaust 22 (Fig. 21), whether the valve is on full release, running, or lap position?*

A. Dirt on the seat of the valve at the end of the stem of piston 18.

*Q. What is the trouble if this leak does not exist in full release or running position, but begins as soon as the valve is placed on lap?*

A. A leakage of little drum pressure causes piston 18 to rise.

*Q. Where could this leak be?*

A. In the little drum itself; in the pipe leading to it; in the pipe leading to the black hand on the gauge; gasket 32 leaking so as to allow little drum pressure to escape to the atmosphere; a scratch on the rotary seat

between the preliminary exhaust port *e* and the groove *h* leading to the atmosphere.

*Q. Why does it leak on lap and not on running or full release position?*

A. Because the leak is not fed on lap, as all ports are closed, but it is in the other two positions.

*Q. If the two hands on the gauge do not show the same pressure when the valve is left in full release position, what is the trouble?*

A. The gauge is incorrect. The main reservoir and train line being directly connected in this position both gauge hands should show the same pressure.

*Q. What could be the trouble if in running position the red hand showed seventy and the black ninety pounds?*

A. The gauge pipes have been connected to the wrong hands.

*Q. What should be done if piston 18 does not respond readily to reductions and seems to stick?*

A. The piston should be removed and cleaned; but never remove the packing ring 19, as it may be sprung or broken.

Get the ring to work free by using kerosene oil to clean it.

*Q. How would you apply the brakes if the preliminary exhaust port were closed and no reduction could be made in service position?*

A. Go carefully toward the emergency position. It might be done by lapping the valve and unscrewing the nut a little that connects the pipe leading to the little drum to the brake valve.

## OPERATION AND DESCRIPTION OF THE D 8 VALVE.

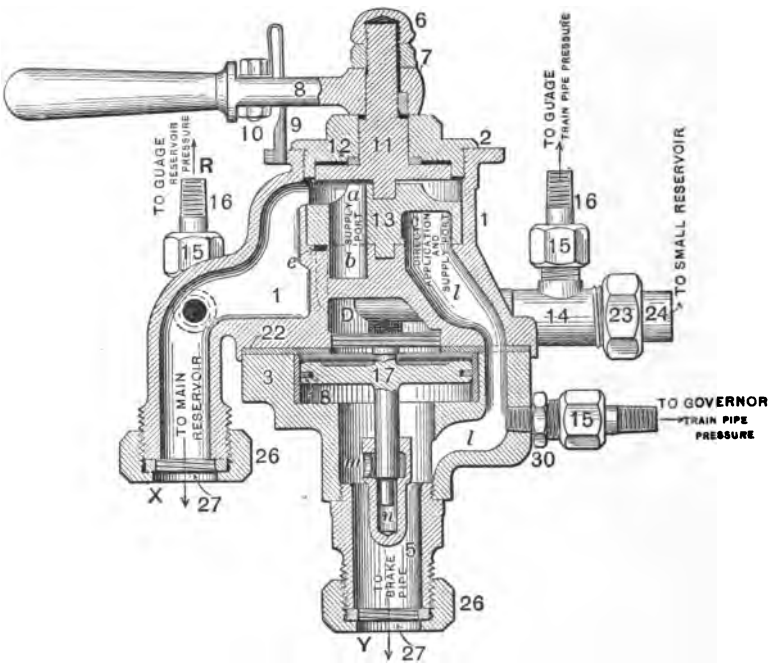


FIG. 31.—D 8 BRAKE VALVE.

*Q. Which valve is most used, the G 6 or the D 8?*

A. The G 6, but the D 8 is also used to quite an extent

*Q. How do the two valves compare with each other in the general principle of operation?*

A. They are alike in principle, but the same results are reached by differently constructed valves.

*Q. Do they have the same positions?*

A. Yes.

*Q. Is there any difference in the pipe connections of the two valves?*

A. Yes, with the G 6 valve the pipe carrying air to the pump governor is connected to main reservoir pressure, while with the D 8 valve it is connected to the train line. This will be seen by comparing the cuts of the two valves.

*Q. Explain the full release position of the D 8 valve.*

A. With the handle 8 of the valve (Fig. 31) in full release position, the air coming from the main reservoir enters the engineer's valve at *X*, passes on top of the rotary, through port *a* of the rotary 13, port *b* of the rotary seat and into cavity *c* of the rotary, thence through port *l* and into the train line at *Y*.

Port *g* in the rotary seat (Fig. 33) leads to chamber *D* and is exposed to cavity *c* of the rotary in this position of the valve so that air passing from the main reservoir into the train line through cavity *c* is also free to go to the little drum through port *g*.

In this position Fig. 32 shows port *j* open to port *e*, and main reservoir pressure passes directly to the little drum through these ports.

*Q. How many ports lead to the little drum in full release?*

A. Two; the same as with the G 6 valve.

*Q. How many to the train line?*

A. One large one, as with the G 6 valve.

*Q. In full release the main reservoir, train line, and little drum are connected. How much pressure will we get on each if the pump is started with the valve in this position?*

A. Seventy pounds.

*Q. Why seventy?*

A. Because with this valve, the train-line pressure governs the pump, and the train line usually carries seventy pounds.

*Q. Do we still have a connection between the main reservoir and train line when the handle is moved to running position?*

A. No, not a direct connection as in full release.

*Q. Do we have a connection between the train line and little drum?*

A. Yes.

*Q. Explain the running position of this valve.*

A. In this position port *j* (Fig. 32) is moved around directly over port *f* in the rotary seat. The main reservoir pressure coming from the top of the rotary feeds through ports *j* and *f* and strikes the valve 21, which is held to its seat by the excess pressure spring 20. This spring has a tension of twenty pounds so that when the main reservoir pressure is twenty pounds greater than that back of the valve, or train-line pressure, the valve is forced from its seat and the air coming from the main reservoir passes through port *f* (Fig. 33) into port *l* and into the train line at *Y*. At the same time it feeds into the train line through port *l*, it feeds up under the rotary into cavity *c* which, as in full release, is exposed to port *l*. Port *g* in the rotary seat (Fig. 33) is still

exposed to cavity *c*, and as air passes into the train line it also passes up into cavity *c* and through port *g* (See Figs. 31 and 33) into cavity *D*, or the little drum.

*Q. With this valve in running position, how much pressure do we get on the main reservoir and train line?*

A. Ninety pounds on the main reservoir and seventy on the train line.

*Q. What stops the pump when we have the ninety and seventy pounds?*

A. The pump governor, which is actuated by train-line pressure. (See 15, Fig. 31.)

*Q. What gives us the excess pressure of twenty pounds in the main reservoir?*

A. The excess pressure spring 20.

*Q. Moving the valve to lap, what is done?*

A. All ports are blanked.

*Q. What shuts the little drum off from the train-line pressure on lap?*

A. A lug on the inside of the rotary rim covers port *g* (Fig. 33) in this position.

*Q. Where is air drawn from in service position?*

A. From cavity *D*, or the little drum.

*Q. Explain this position.*

A. In this position, the slot *p* on the under side of the rotary (Fig. 34) connects port *e*, which leads through the rotary seat to the little drum, with port *h* in the rotary seat (Figs. 32 and 33) leading to the atmosphere.

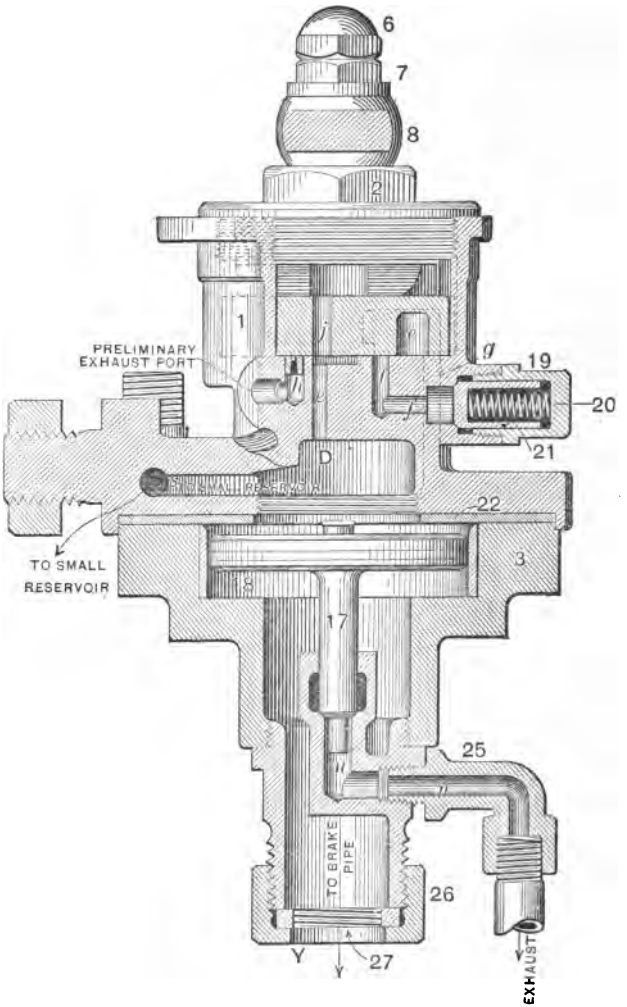


FIG. 32.—D 8 BRAKE VALVE.

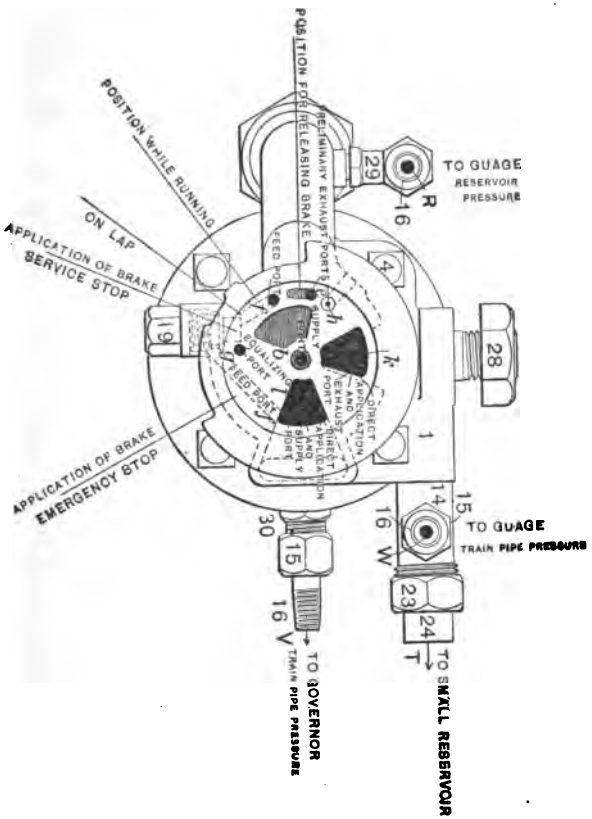


FIG. 33.—D 8 BRAKE VALVE.

*Q. How does the reduction of little drum pressure affect the equalizing piston 17?*

A. The same as with the G 6 valve.

*Q. Is there any difference between the emergency position of this and the G 6 valve?*

A. No.

*Q. What is the object of the small slot in the rotary seat (Fig. 33) leading from port e, which leads to cavity D, towards port f?*

A. This port comes into use when moving the rotary into full release position. It is to allow main reservoir

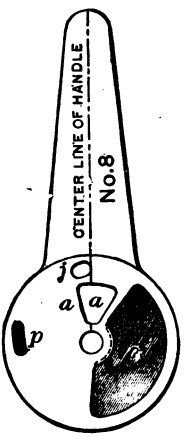


FIG. 34.—SHOWING BOTTOM SIDE OF ROTARY OF D 8 VALVE.

pressure to reach cavity *D* on top of the equalizing piston through port *j* a trifle sooner than it reaches the train-line pressure underneath the piston 17. Just as soon as the rotary is moved past running position toward full release, port *j* in the rotary is connected with the slot in the rotary seat leading to port *e*, thus allowing main reservoir pressure to reach the top of piston 17 a trifle sooner than it reaches the train-line pressure underneath the piston.

*Q. What would happen if the air from the main reservoir reached the under side of the piston 17 (Fig. 32) first?*

A. The piston would be forced from its seat, especially on a short train, and there would be an unnecessary waste of air before the piston would seat.

## PECULIARITIES AND TROUBLES OF THE D 8 VALVE.

*Q. Why is the equalizing piston 17 raised nearly every time the handle is thrown to full release, on an engine alone, while if the engine is coupled to a train of four or more cars this does not happen?*

A. In full release two small ports charge the little drum and one large one charges the train line. On an engine alone the volume of air in the train line and the little drum are so nearly equal that charging the train line so much faster through a large port than the little drum is charged through two small ones makes the pressure greater underneath piston 17 than that above it. The piston is consequently forced from its seat and enough train-line pressure is lost through the train-line exhaust to allow little drum pressure to force piston 17 to its seat.

*Q. Does this happen with both valves?*

A. Yes.

*Q. Why does this not happen when the engine is coupled to some air cars?*

A. Because in this case the large port used to charge the train line in full release has a large space to supply with air, and the little drum is charged faster than the train line.

*Q. Which hand should start first if the pump is started with the valve in full release position?*

A. They should start together and stop at seventy pounds.

*Q. Which hand should start first in running position?*

A. The red should go up twenty pounds before the black hand moves. They should then proceed twenty pounds apart and stop when ninety pounds is registered by the red hand and seventy by the black.

*Q. What is the trouble if both hands start and remain together with the valve in running position?*

A. The rotary leaks or there is dirt on the excess pressure valve 21 (Fig. 32).

*Q. How do we tell which it is?*

A. Try the rotary on lap as described with the G 6 valve, to see if it leaks. If it is tight the trouble is with the excess pressure valve. The trouble will be found to be dirt on the seat of the excess pressure valve nineteen times out of twenty.

*Q. How can you remove the excess pressure valve when everything is charged?*

A. Turn the cut-out cock under the engineer's valve, place the rotary on service position and remove the cap nut 19.

*Q. After we remove the excess pressure valve, clean it and the chamber in which it works, what should be done?*

A. The rotary should be placed in running position to blow out any loose dirt or scale before replacing the valve.

*Q. What causes this gum to collect here?*

A. The too free use of oil or a poor kind on the air end of the pump.

*Q. If the red hand stands at eighty and the black hand at seventy when the pump stops and the rotary is in running position, what is wrong?*

A. The excess pressure spring 20 (Fig. 32) is weak.

*Q. What if the red stands at one hundred and the black at seventy?*

A. The excess pressure spring is too stiff.

*Q. What if the red stands at eighty and the black at sixty, or the red at one hundred and the black at eighty?*

A. The pump governor needs adjusting.

*Q. What is the trouble if no air will pass into the train line with the valve in running position?*

A. The excess pressure valve is stuck to its seat.

*Q. What has to be done?*

A. The handle of the valve has to be run in full release until the excess pressure valve chamber can be cleaned.

*Q. How much pressure will we get on the main reservoir and how much on the train line if the pump is started with the valve on lap?*

A. No pressure in the train line, and boiler pressure in the main reservoir.

*Q. Why boiler pressure in the main reservoir?*

A. Because the pump continues to work as long as the steam is strong enough to compress the air higher, there being no air in the train line to work the governor and stop the pump.

*Q. Does the main reservoir pressure run up this way when the brakes are applied and the valve is on lap?*

A. Yes.

*Q. How is this overcome?*

A. The engineer watches the gauge and partially closes the pump throttle, or, on some roads, two governors are used, one connected to the main reservoir pressure and the other, as in the cut (Fig. 33), with the train line.

*Q. What is likely to happen if this high pressure gets into the train line?*

A. The wheels are likely to be slid and the hose burst.

*Q. If the rotary or excess pressure valves leak with the D 8 valve, how will the pump work?*

A. After stopping, the pump will not start working again until both train-line and main reservoir pressures have leaked below seventy pounds or that at which the governor is set.

*Q. Why is it that with the valve midway between the service and full emergency positions the black hand shows main reservoir pressure, when we know by the position of the valve that there is no air in the train line?*

A. This is a peculiarity of the valve. In this position port *j* of the rotary stands over port *g* of the rotary seat that leads to the little drum. In this case the pressure represented is what is in the little drum but not in the train line, as the train line is connected to the atmosphere by a large port.

*Q. Are the troubles with the equalizing piston described in the explanation of the G 6 valve applicable to the equalizing piston of the D 8 valve?*

A. Yes.

## A COMPARISON OF THE G 6 AND D 8 BRAKE VALVES.

*Q. How much pressure do we get in the main reservoir, train line and little drum with the G 6 and D 8 brake valves, if the pump is started with the valves in full release and left there until it stops?*

A. Ninety pounds in each with the G 6 valve, and seventy in each with the D 8 valve.

*Q. How do the hands on the gauge go up with the G 6 and D 8 valves, if the pumps are started with the valves in running position?*

A. With the G 6 valve both hands go together to seventy pounds, when the black hand stops, and the red hand continues until ninety pounds is reached in the main reservoir.

With the D 8 valve the red hand goes up twenty pounds before the black moves. They continue to rise twenty pounds apart and stop with ninety on the red and seventy pounds on the black hand.

*Q. Why is a leak on the train line more likely to creep the brakes on with the D 8 than with the G 6 valve, with the valves in running position?*

A. Because in this position air will feed into the train line if the pressure there is less than seventy pounds with the G 6 valve, while with the D 8 no air will feed into the train line unless there is twenty

pounds more pressure in the main reservoir than in the train line.

*Q. What is the difference between the two valves in the stopping of the pump?*

A. With the *G* 6 valve, the pump stops when the desired pressure is compressed into the main reservoir, regardless of the pressure in the train line, while with the D 8 valve it is exactly the reverse.

*Q. How much pressure will we get on the main reservoir and train line with these valves, if the pump is started with the valves on lap?*

A. Ninety pounds on the main reservoir and nothing on the train line with the *G* 6 valve; boiler pressure on the main reservoir and nothing on the train line with the D 8 valve.

## WESTINGHOUSE PUMPS.

*Q. What four sizes of pumps are there?*

A. The 6, 8, 9½ and 11-inch pumps.

*Q. Is the 6-inch pump still in use?*

A. Yes, but very few are ever seen.

*Q. What is the use of the pump in the air-brake system?*

A. To compress the air used in applying and releasing the brakes.

*Q. Which pump is gradually becoming the standard, and why?*

A. The 9½-inch pump, because the number of air cars now used in trains requires a pump of greater capacity to insure recharging the train more quickly in descending grades.

*Q. How is dry steam obtained for the pump?*

A. A pipe is screwed into the dome near its top and a pump throttle conveniently located in the pipe, or a dry pipe is run from the top of the dome back through the boiler and coupled to a pump throttle screwed into the top of the boiler inside of the cab.

*Q. What would happen if this dry pipe leaked inside the boiler?*

A. Water would work into the pump and wash out the oil, causing the pump to groan and cut.

*Q. What is placed between the pump throttle and the pump?*

A. The lubricator and pump governor.

*Q. How are they located?*

A. The pump governor next to the pump, and the lubricator between the governor and pump throttle.

*Q. What would happen if the lubricator were placed next the pump?*

A. When the pump governor shut off the steam, with the lubricator ordinarily used, the steam between the lubricator and pump governor condensing would form a vacuum that would draw all the oil from the lubricator, and there would be a great waste of oil.

*Q. What is the capacity of a 9½-inch pump in good condition?*

A. With one hundred and forty pounds of steam pressure, a 9½-inch pump will compress air from zero to seventy pounds in thirty-eight seconds in a reservoir 26½ x 34 inches, and from twenty to seventy pounds in twenty-seven seconds.

*Q. What is the capacity of an 8-inch pump in good condition?*

A. With one hundred and forty pounds of steam pressure, the 8-inch pump will compress air from zero to seventy pounds in a main reservoir 26½ x 34 inches long (outside measurement) in sixty-eight seconds, and from twenty to seventy pounds in fifty seconds. The reservoir contains about 8¾ cubic feet.

## 9½-INCH PUMP.

*Q. What is the office of the parts in the top head of the 9½-inch pump (Plate VII)?*

A. They with the reversing rod 71 form the valve motion of the pump.

*Q. What is Fig. 37 (Plate VII)?*

A. It is a cut of the bushing inside of which the slide valve 83 moves when actuated by the movement of the pistons 77 and 79, because fastened to their connecting stem.

*Q. What are ports b, d, and c' (Fig. 37, Plate VII)?*

A. They correspond exactly to the ports in the valve seat of a locomotive.

In Fig. 35 (Plate VII) we see that *b* leads to the bottom of the steam cylinder, *c'* to the top, and *d* leads to the exhaust pipe at *Y*.

*Q. Of what use is port t (Fig. 37, Plate VII)?*

A. It is a port by means of which chamber *E* at the left of the small piston 79 is connected with the atmosphere through port *d*.

*Q. If this port were not there, would the pump reverse?*

A. No; when the main valve pistons 77 and 79 moved to the left, a back pressure would be formed in chamber *E* that would stop the reversing movement of the pistons 77 and 79 and stop the pump.

*Q. Explain the passage of steam after it enters the pump at X, and its effect.*

A. Steam coming from the boiler through the pump governor enters the pump at *X*, thence passes through ports *a*, *a'* and *a*² (Figs. 35 and 36, Plate VII), into chamber *A* between the main valve pistons. The area of piston 77 being so much greater than that of 79, the steam moves these pistons to the right, carrying the slide valve 83 (Figs. 35 and 36) with them to the position shown

in Fig. 35. Steam in chamber *A* is now free to pass through ports *b*, *b'* and *b*² underneath the main piston 65.

*Q. What would become of any steam above piston 65?*

A. Any steam above this piston is free to pass to the atmosphere through ports *c*, *c'*, the exhaust cavity *B* of the slide valve, *d*, *d'*, *d*², and through the exhaust pipe from *Y*.

*Q. How is the pump reversed?*

A. The main piston 65 is now being forced up by the steam pressure, and just before it reaches the top of its stroke the reversing plate 69 strikes the lug *J* on the reversing rod 71, lifting the rod. As this rod is lifted the reversing slide valve 72 (Fig. 36) is carried up with it, and the pump is reversed.

*Q. What is the duty of the reversing slide valve 72 (Fig. 36)?*

A. The duty of this valve is to admit and exhaust steam from chamber *D* (Fig. 35) between the piston 77 and head 84, and, as now shown, it exhausts steam from cavity *D* through ports *h* and *h'* (Figs. 37 and 36), port *H* of the reversing slide valve, and through ports *f*, *f'*, *d*, *d'*, *d*², and out at *Y*.

*Q. How does raising the reversing slide valve reverse the motion of the pump?*

A. As the reversing valve is lifted by the rod 71, port *g* in the bushing (Figs. 36 and 37) is exposed to the steam pressure which is always in chamber *C*, which is in constant communication with chamber *A* by means of ports *e* and *e'* (Fig. 36).

When valve 72 is raised, steam passes through port *g* (Figs. 36 and 37) into cavity *D*. We now have equal steam pressure on both sides of piston 77, and it is balanced; but the pressure acting on the right of piston

79 moves the pistons and the slide valve to the left, connecting the steam pressure in chamber *A* with the top of piston 65 through ports *c'* and *c*, and the under side of piston 65 is connected with the atmosphere through ports *b*², *b'*, *b*, cavity *B* of the slide valve 83, *d*, *d'*, *d*², and out at *Y*.

*Q. The piston 65 is now on its down stroke; what brings the stroke to the point from which we started?*

A. The reversing plate 69 strikes the button at the bottom of the reversing rod 71 and pulls the reversing slide valve 72 down to its position as shown in Fig. 36. We have now completed one entire stroke of the pump.

*Q. Which are the receiving valves?*

A. Those marked 86 at the left of Fig. 35.

*Q. Which are the discharge valves?*

A. Those marked 86 at the right of the pump.

*Q. Describe the action of the air end of the pump.*

A. As piston 66 is raised, the air above the piston is compressed and a vacuum would be formed underneath if air from the atmosphere did not enter through the lower receiving valve 86.

The ports are so arranged that the pressure above the piston will strike the receiving valve from above, forcing it to its seat, and the discharge valve underneath, forcing it from its seat, allowing the compressed air to pass down and out into the main reservoir at *Z*.

The suction underneath the piston allows atmospheric pressure entering at *W* to force the lower receiving valve from its seat and fill the cylinder underneath the piston with air. The lower discharge valve 86 is held to its seat by main reservoir pressure. When the pump is

reversed, the opposite valves from those just described are affected in the same way.

*Q. Of what use is the port in the cap 74 (Fig. 36, Plate VII) which leads to the top of the stem 71?*

A. This port is connected with the top end of the steam cylinder. Were it not for this port there would be a back pressure on top of stem 71 which would not allow the reversing slide valve to be raised to reverse the pump. This port is connected with the atmosphere through the top end of the steam cylinder, as shown in Fig. 2, each time this end of the cylinder is connected with the atmosphere.

## 9½-INCH PUMP—PECULIARITIES, TROUBLES, CARE.

*Q. What should be done in packing the pump?*

A. It should be packed loosely and the gland nuts 96 screwed up only sufficient to prevent a blow. Do not use a wrench if no blow exists when the gland is screwed up by hand.

*Q. Should asbestos or anything containing much rubber be used in packing a pump?*

A. No; asbestos hardens and is hard to remove, and rubber is likely to wear the stem too much.

*Q. How often should the air end of the pump be oiled?*

A. Modern practice demands that a pump in freight and passenger service should be oiled according to the work which they perform. The old method of oiling a pump only when it groans has been abandoned.

*Q. Some pumps have been run without ever*

*oiling the air end; how did the lower cylinder receive its lubrication?*

A. From the swab which should always be placed on the piston rod, and from the oily condensation that follows down the rod.

*Q. What kind of oil should be used in the air end of the pump?*

A. A good quality of valve oil gives the best results. The same oil that is used in the steam cylinder also gives best results in the air cylinder.

*Q. What care should be taken in starting a pump?*

A. It should be started slowly so as to get a pressure of twenty or thirty pounds for the air piston to cushion upon, and the condensed steam should be gotten rid of before the pump attains any speed. Get the lubricator at work as soon as the pump is started.

*Q. Does any harm result from oiling the air end of the pump through the suction?*

A. Yes; the suction holes are stopped up, the air valves gummed, and a generally dirty and ineffective pump results.

*Q. What trouble will cause the pump to blow?*

A. Packing rings in the main steam and reversing pistons leaking, slide valve 83, or a leaky reversing slide valve 72 are the main troubles.

*Q. What will cause a pump to pound?*

A. It will pound if it is not fastened firmly, if the air valves are stuck, or if there is too great a lift of air valves. Sometimes it will pound if the reversing plate is worn too much to reverse the pump quickly enough, or if the nuts on the pistons are loose.

*Q. What would be the effect if the top discharge valve were stuck open?*

A. Main reservoir pressure would always be on top of the air piston; this would cause a slow up-stroke and a quick down-stroke of the pump. No air would be drawn into the pump on the down-stroke. If the oil cock were opened on the pump, there would be a constant blow at that point as long as there was any pressure in the main reservoir, and no oil could be put into the air cylinder, as it would be blown out by the escaping air.

*Q. What would be the effect if the bottom discharge valve were stuck open?*

A. The same effect as above described, only on the opposite stroke of the pump. In this case the oil cock would not tell us anything.

*Q. What would be the effect if the top discharge valve were stuck shut?*

A. The pump would have a slow up-stroke, and unless the valve were forced from its seat, would stop or go slow enough to allow the pressure above the air piston to leak by the packing rings when the air pressure above the piston became as high as the steam pressure.

*Q. What would be the effect if the bottom discharge valve were stuck shut?*

A. The same effect as just described, but on the opposite stroke.

*Q. What effect would follow if the top receiving valve were stuck open?*

A. Air would be drawn into the pump on the down-stroke and blown back to the atmosphere on the up-stroke. By placing the hand on the air inlet and

watching the piston this trouble may be easily located. The pump would have a tendency to work faster on the up-stroke.

*Q. What effect would follow if the bottom receiving valve were stuck open?*

A. The same as just described, but on the opposite stroke.

*Q. What would be the effect were the top receiving valve stuck shut?*

A. No air would be drawn into the pump on its down-stroke, and a partial vacuum being formed above the piston would cause the pump to have a slower down-stroke, as the vacuum would be working against the steam, and a faster up-stroke, as the vacuum would be working with the steam.

*Q. What would be the effect if the bottom receiving valve were stuck to its seat?*

A. The same as with the top receiving valve stuck shut, but on the opposite stroke.

*Q. How may a stuck valve usually be loosened?*

A. By tapping the valve cage lightly.

*Q. How will a pump work with dirt on the seat of a discharge valve?*

A. The same as with a stuck receiving valve. The dirt on the valve allows main reservoir pressure to feed back into the pump and aid the steam on half the stroke, causing one stroke to be quick, and work against the steam on the other stroke, causing the pump to work slow.

*Q. How could we tell that a receiving valve was stuck shut, or a discharge valve open, besides by the erratic action of the pump?*

A. The hand placed on the strainer would feel no air drawn in on one-half of the stroke.

*Q. How can we tell if the top discharge valve has a poor seat?*

A. Open the cock 98 (Fig. 35, Plate VII) and air will issue thence constantly if the dirt on the seat of the valve allows main reservoir pressure to feed back into the cylinder.

*Q. What caused some of the first 9½-inch pumps to stop?*

A. The port *g* (Fig. 37, Plate VII) did not extend quite far enough, and the wear of piston 77 (Fig. 35, Plate VII) would sometimes allow it to travel far enough to close port *g* entirely, and the pump could not be reversed.

*Q. How may a pump often be started if it stops?*

A. By jarring lightly on the top head.

*Q. At what speed are good results obtained from a pump?*

A. At about forty-five or fifty double strokes a minute on a level, but in handling air trains on a grade this speed should be increased according to work to be done.

*Q. Why is it best not to run a pump too slow?*

A. A pump running too slow will allow the air that is being compressed to leak by the packing rings 67 (Fig. 36, Plate VII), and air will not be drawn in at the other end of the cylinder as it should.

With sixty strokes to the minute, a pump will make more air than with the same number of strokes spread over three minutes. In the latter case the compressed air has too much time to leak by the air piston-packing rings.

*Q. How can we tell if the packing rings in a pump are loose?*

A. Have the pump working at fair speed and put the hand on the air inlet to see if the air is drawn in full stroke. Try this on both strokes, and if air is drawn in only during a part of each stroke, the rings are loose.

*Q. What lift should the receiving and discharge valves have?*

A. $\frac{3}{32}$ of an inch.

*Q. What will cause a pump to heat?*

A. Too small lift of air valves, racing a pump, loose air piston-packing rings, using a small main reservoir on long trains, packing the piston rod too tight, or using so much oil on the air end of the pump that the pipe leading from the pump to the main reservoir is partly closed by the oil being baked to it. The pipe gradually becomes so small, that the friction caused by the air being forced through it causes the air to heat. This heat spreads to the pump.

*Q. What should be done to cool a hot pump?*

A. Ease up on the speed if running fast, remove cap 74, and pour a small amount of good oil into the pump.

*Q. If the packing burns out of a pump, can it still compress air?*

A. Yes; the lower half of the air cylinder will not be affected.

*Q. Does compressing air cause it to heat?*

A. Yes; the higher the pressure the greater the degree of heat, because of the friction due to forcing the air particles closer together.

*Q. What is likely to be the trouble if a pump dances?*

A. A leak on the seat of the reversing slide valve or a bent reversing stem; also a burr being worn on the reversing plate, thus allowing the button on the stem to catch.

*Q. How should a pump be located?*

A. It should be where the engineer will notice it if it stops. Under no consideration should it be located lower than the main reservoir, as dirt and water would stay in the pump.

*Q. How may a pump be cleaned?*

A. By allowing a solution of lye in hot water to work through the pump. The pump should be worked slowly and the water caught in a pail before it enters the main reservoir. Run the solution through several times; then run clean hot water through to wash out the lye, or it will eat the leather gaskets throughout the brake system.

*Q. Where does the exhaust pipe connected to the pump at Y lead?*

A. Usually to the smoke box in the engine, but this practice is gradually giving way to the better one of running the exhaust pipe into the exhaust passage from the main cylinder to the stack. This latter method almost does away with the draught on the fire caused by the pump exhaust thus saving fuel, and the pump makes very little noise in working. Some engines are piped to carry the pump exhaust up over the cab, but this is awkward, noisy, and keeps the cab dirty.

*Q. What effect would be produced if the gasket under the top head leaked?*

A. If the leak were between the two ports, one leading to the top and the other to the bottom of the main piston, the pump would stop.

The accompanying table shows heat due to compression. This heat depends upon the initial temperature. The rise in temperature is due to the heat of compression.

| | | | | | | | | |
|---|---|---|---|---|---|---|---|---|
| Temperature of air before compression | | | | | | | 60° | 90° |
| " | " | " | compressed to | | 15 | lbs. | 177° | 212° |
| " | " | " | " | " | 30 | " | 255° | 294° |
| " | " | " | " | " | 45 | " | 317° | 362° |
| " | " | " | " | " | 60 | " | 369° | 417° |
| " | " | " | " | " | 75 | " | 416° | 465° |
| " | " | " | " | " | 90 | " | 455° | 507° |
| " | " | " | " | " | 105 | " | 490° | 545° |
| " | " | " | " | " | 120 | " | 524° | 580° |

## EIGHT-INCH PUMP.

*Q. State the principal difference, aside from that of size, between the 8 and 9½-inch pumps.*

A. It is in the valve motion; that of the 9½-inch pump is simpler, easier to get at for repair, and less likely to get out of order.

Piston 23 (Fig. 38), called the reversing piston, is not found in the 9½-inch pump (Plate VII).

*Q. Are the air ends of the pumps alike?*

A. In principle, yes; but the location of the air valves and their size are somewhat different, although the operation is the same.

*Q. What lift do the air valves of the 8-inch pump have?*

A. The receiving should have ⅛ and the discharge $\frac{3}{32}$-inch lift.

*Q. As the steam enters the pump at X (Fig. 38), where is it free to pass?*

A. Into chamber *m* and also through port *h* into a port not shown which leads to cavity *e*, the reversing slide-valve chamber.

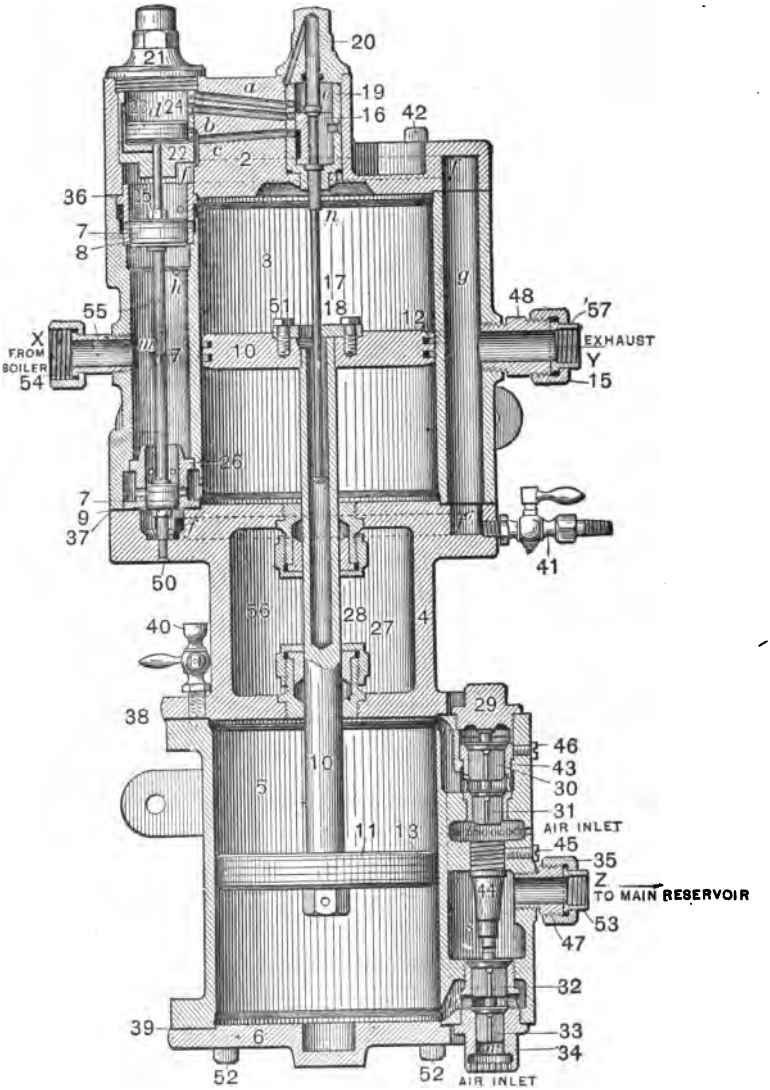


FIG. 38.—8-INCH PUMP.

*Q. Does this chamber always contain the same pressure as chamber m?*

A. Always.

*Q. The pistons 7 (Fig. 38) are of unequal size, and the upper piston 7 and piston 23 are the same size. What happens when steam enters chambers m and e with the reversing slide valve in its present position?*

A. Steam is admitted through port *a* on top of piston 23; this pressure balances the upward pressure on the top piston 7, and the pressure acting down on the small piston 7 causes all three pistons to travel down to the positions shown in the cut.

*Q. Explain the passage of steam with the valve motion in this position.*

A. Steam passes through small ports in bushing 26 (Fig. 38), just above the small piston 7, underneath piston 10, forcing it up. At the same time the top end of the steam cylinder is connected with the atmosphere through the upper ports of bushing 25, the port *f*, as shown by the dotted lines, down through *g* and out at *Y*.

*Q. When the piston moves up so that the reversing plate 18 strikes the lug n, the reversing slide valve 16 is forced up. What is done by raising this valve?*

A. The exhaust port in the slide valve connects port *b* leading to chamber *d* with port *c* which leads into the exhaust port *f*, and we have no pressure left on top of piston 23.

*Q. With no pressure acting down on piston 23 (Fig. 38), what happens?*

A. On account of the greater area of the upper piston 7, both pistons 7 are raised.

*Q. Explain the passage of steam with pistons 7 moved up.*

A. Steam from chamber *m* now passes through the lower ports of bushing 25 on top of the main piston 10, forcing it down, and the steam on the under side of piston 10 passes out of the lower holes of bushing 26 into port *f'*, and out through the exhaust port *Y*.

*Q. When piston 10 reaches the bottom of its stroke, how is the pump reversed?*

A. The reversing plate 18 strikes the button at the end of the reversing stem 17 and moves the reversing slide valve 16 down to the position as shown in the cut.

*Q. What will cause blows in this pump?*

A. Loose packing rings in the main steam piston 10, piston 23, or pistons 7, a bad seat on the reversing slide valve, or the top of stem 17 being a loose fit in the cap nut 20 (Fig. 38).

*Q. What are the other troubles of the pump?*

A. They are in principle so nearly allied to those of the 9½-inch pump that a study of them would be practically a review of the work discussed in the study of that pump. In all cases of pump trouble, if one keeps in mind the principle of the operation of the pump, a little thought will suffice to locate the defects.

## WESTINGHOUSE "RIGHT AND LEFT-HAND" NINE AND ONE-HALF INCH PUMP.

*Q. What is the difference between the nine and one-half inch pump shown in Fig. 39 and the one shown in Figs. 35 and 36.*

A. The operation of the two pumps is exactly the same; the parts are identical with the exception of the steam and exhaust connections, and the drain cock put in to drain any accumulation in port *A*.

*Q. How do the steam and exhaust connections differ.*

A. Both, as shown in Fig. 39, are extended through to the other side of the pump for convenience in piping in case it is desirable to locate the pump on the left side of the engine.

*Q. Explain the proper use of the connections as shown in Fig. 39.*

A. *A* is the steam inlet and *B* the steam exhaust.

*Q. What must be done if this pump should be changed to the right side of the engine?*

A. Remove plug at *C* and fittings at *A* and exchange them; the same should be done with the plug at *D* and fittings at *B*. *C* will then be the steam inlet and *D* the steam exhaust.

*Q. Explain the operation of this pump.*

A. A description of the operation of this pump would be but a repetition of what is said in the chapter concerning the standard nine and one-half inch pump.

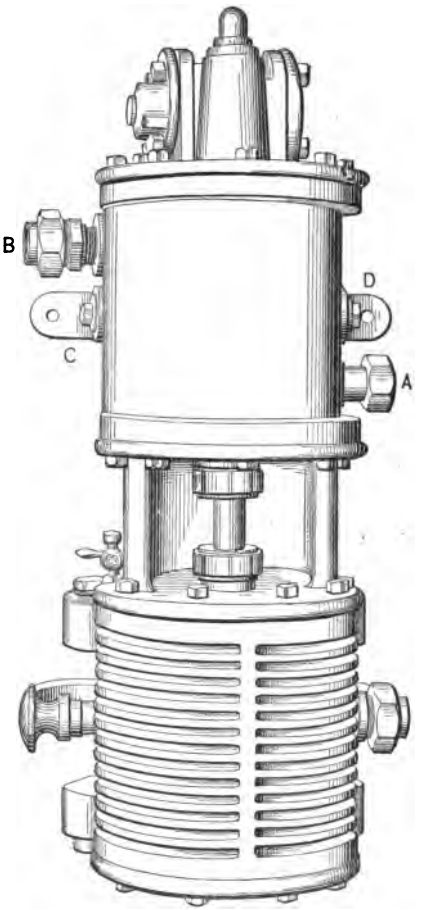


FIG. 39.—RIGHT AND LEFT-HAND PUMP.

## WESTINGHOUSE ELEVEN-INCH PUMP.

*Q. What are the dimensions of cylinders and the stroke of the eleven-inch as compared with the nine and one-half inch pump?*

A. The nine and one-half inch pump is 9½″ x 9½″ x 10″ stroke, as compared with 11″ x 11″ x 12″ stroke with the eleven-inch pump.

*Q. What are the comparative efficiencies of the two pumps?*

A. With a piston speed of 83 feet per minute and operating continuously, the efficiency of the eleven-inch pump is about 33 per cent. greater than the nine and one-half inch pump; under the above conditions the larger pump will compress 40 cu. ft. of free air while the nine and one-half inch pump compresses 30 cu. ft. These figures, however, are for a very slow pump speed, and these capacities can, if desired, be greatly exceeded, but in the same proportion.

*Q. Explain the operation of the eleven-inch pump.*

A. Although some of the parts are slightly different in construction, the operation is the same as that of the nine and one-half inch pump described in the chapter beginning on page 132.

*Q. Name the different parts of the pump.*

A. 3648. Tophead.
3649. Steam Cylinder.
3650. Center Piece.
3653. Air Cylinder.
1585. Lower Head.
3654. Steam Piston and Rod.
3660. Air Piston, complete.
1687. Piston Packing Ring.
1590. Piston-Rod Nut.
1591. Piston-Rod Jam Nut.
1589. Piston-Rod Cotter Pin.
1688. Reversing-Valve Plate.
1689. Reversing-Valve Plate Bolt
1709. Reversing-Valve Rod.
1706. Reversing Valve.
1700. Reversing-Valve-Chamber Bush.
1701. Reversing-Valve-Chamber Valve-Stem Bush.
1710. Reversing-Valve-Chamber Cap.
1595. Main-Valve Bush.
3647. Main Valve.
3645. Large Main-Valve Piston.
1695. Large Main-Valve-Piston Packing Ring.
3646. Small Main-Valve-Piston.
1694. Small Main-Valve-Piston Packing Ring.
1696. Main-Valve Stem.
2052. Main-Valve-Stem Nut.
1707. Main Slide Valve.
1599. Right Main-Valve Cylinder Head.
1600. Left Main-Valve Cylinder Head.
1705. Air Valve.
1698. Air-Valve Seat.
1708. Air-Valve Cage.
3652. Valve-Chamber Cap.
2682. Steam-Exhaust Stud.
2684. Steam-Exhaust Union Nut.
2683. Steam-Exhaust Union Swivel.
3315. Pipe Bushing (1½" x 1¼").
1885. One-inch Steam-Pipe Stud.
1886. Governor Union Nut.
1882. Air-Discharge Stud.
1883. Air-Discharge Union Nut.
1884. Air-Discharge Union Swivel.
1702. Stuffing Box.
1704. Stuffing-Box Nut.
1703. Stuffing-Box Gland.
1916. Air-Cylinder Oil Cup.
3661. Short Tee-Head Bolt (¾" x 2¾") and Hexagon Nut.
3662. Long Tee-Head Bolt (¾" x 3⅜") and Hexagon Nut.
1711. Upper Steam-Cylinder Gasket.
1712. Lower Steam-Cylinder Gasket.
1713. Upper Air Cylinder Gasket.
1714. Lower Air Cylinder Gasket.
1887. Drain Cock.
2494. Air Strainer.
1950. One-inch Steam-Pipe Sleeve.
1715. Left Main-Valve-Head Gasket.
1716. Right Main-Valve-Head Gasket.
1759. Main-Valve-Head Bolt (⅝" x 1½").
1919. Cylinder-Head Plug.
2482. Packing and Cap-Nut Wrench.
2485. Air-Valve-Seat Wrench.
2483. Air-Valve-Cage Wrench.
2481. Wrench for Nuts on Tee-Head Bolts.
3269. Short Cap Screw (¾" x 2").
3270. Long Cap Screw (¾" x 2⅝").
1900. One and One-half-inch Pipe Plug.
3682. Two-inch Pipe Plug.

*Q. Two sets of plugs are shown on either side of the steam cylinder; of what use are they?*

A. These plugs are for convenience in piping the pump. Plugs 1900 are at opposite ends of the same

S
1698
1705
Air la
24
1705
706

steam port. Plugs 3682 are at opposite ends of the exhaust port. The openings are used according to which side of the engine the pumps are located, and provide a means of making the piping simple, since a steam port opening is toward the cab and an exhaust opening toward the front end, if placed on either the engineer's or fireman's side.

*Q. Do the nine and one-half inch pumps have this provision?*

A. The one usually placed on the engineer's side, and known as the Right-Hand Pump, does not, while the Right and Left-Hand Pump, which may be used on either side, does.

## WESTINGHOUSE PUMP GOVERNORS.

The accompanying pump governor cuts represent the new and the old style of governors.

*Q. Explain the duty of spring 41 (Fig. 42).*

A. The tension of the spring 41 is regulated by the cap nut 40 and holds down the piston 43, which in turn holds the small pin valve on its seat.

The fitting 45 is connected to main reservoir pressure if used with the G 6 brake valve, and with the train line if used with the D 8 brake valve. When the pressure entering at 45 and acting on the under side of the piston 43 is greater than the tension of the spring 41, the piston is forced up, thus lifting the pin valve, to which arrow 42 points, from its seat.

*Q. What effect does unseating this pin valve have?*

A. It allows air pressure to reach the top of piston 28 (Fig. 42), forcing it down and closing valve 26.

*Q. What effect does closing valve 26 have?*

A. It shuts off the steam supply and stops the pump.

*Q. At the same time that air forces piston 28 down, where else does it go and with what effect?*

A. It passes out of the small relief port, at which the arrow 37 points, to the atmosphere. This leakage is sufficient to keep the pump working slowly, so that steam will not condense and be thrown out of the stack when the pump starts again.

*Q. What is effected by any reduction of the main reservoir pressure?*

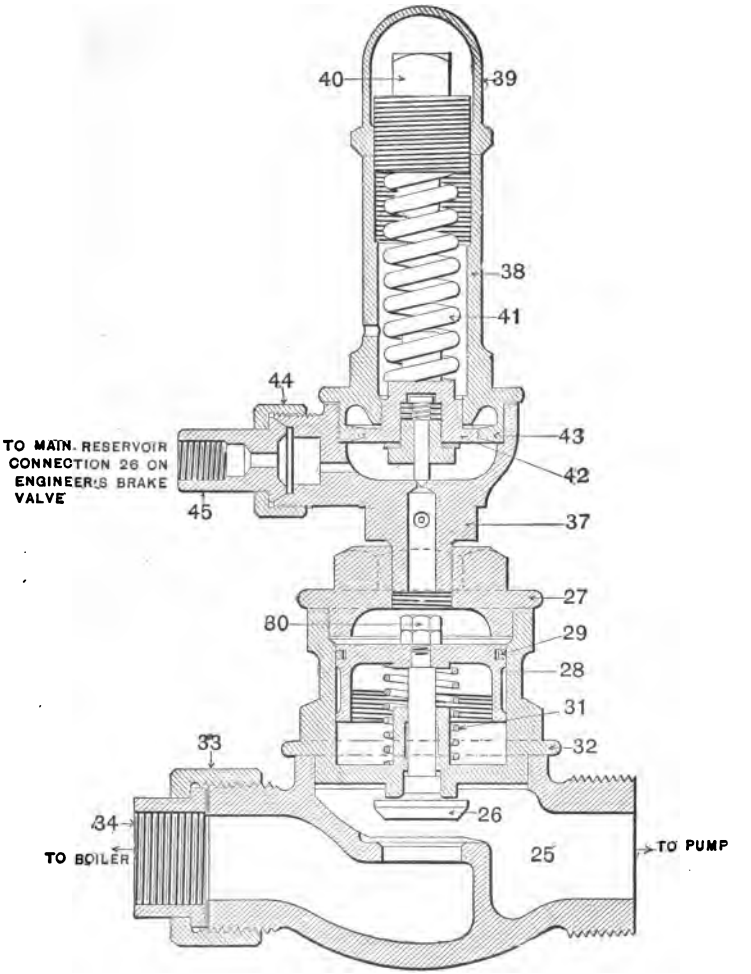


FIG. 42.—IMPROVED PUMP GOVERNOR.

A. Any reduction of main reservoir pressure allows the spring 41 to force the pin valve to its seat, and what air still remains on top of piston 28 escapes through the relief port 37, and, with no pressure on top of piston 28, the spring 31 raises the piston 28 and valve 26, allowing steam from the boiler to reach the pump.

*Q. Of what use is the spring under the head of the pin valve?*

A. To hold the valve up when piston 43 is raised. Were it not for the spring, the pin valve would remain seated.

*Q. If any air should leak by piston 28, or any steam should leak by the stem of the valve 26 into the cavity under piston 28, how would it escape?*

A. There is a port in the casing 32 connected to a drip pipe which leads to the atmosphere.

*Q. What effect would be noticed if this drip pipe became clogged with dirt or were frozen shut, when there was a leakage of steam up under the governor piston?*

A. Piston 28 could not be forced down, and the pump would not stop working until the main reservoir pressure was about equal to boiler pressure.

*Q. What would be the effect if the release port 37 (Fig. 42) were closed by dirt?*

A. The pump would be very slow in starting to work after once stopping.

*Q. Why?*

A. Because, when the pin valve closed, the cavity above piston 28 would be filled with main reservoir pressure, which could escape only by leaking by the packing ring 29 and out to the atmosphere through the drip pipe.

*Q. What effect would dirt on the seat of the pin valve have?*

A. It would make a constant blow out of the relief port, and if air could leak in faster than it could get out of the relief port, the pump would either stop or work very slowly, even if the pump throttle were wide open.

*Q. Why would it work slowly?*

A. Because the pressure on piston 28 may force the valve 26 partly shut and allow only a small amount of steam to reach the pump. If the leak were bad enough, the pump would be stopped entirely.

*Q. What effect would be noticed if the pin valve became gummed so that it would not seat centrally?*

A. Air would pass down on piston 28, and the action of the pump would be the same as just described, with dirt on the seat of this valve.

*Q. What would be the effect if the casing in which the governor piston works should become badly worn, and a worn ring 29 were replaced with a new one without truing the casing?*

A. When piston 28 was forced down a little farther than usual, it might stick, causing the pump to stop. A jar on the governor might start the pump.

*Q. What is the difference between the improved ¾ and the 1-inch governors?*

A. Their operation is identical, but there is a difference in size, as one is used with the 8 and the other with the 9½-inch pump.

*Q. Explain the operation of the old pump governor.*

A. It is the same as that of the improved governor, excepting that, after the pin valve is closed, the air in

the chamber above the piston, instead of escaping to the atmosphere through a relief port, passes by the packing ring 24 and out to the atmosphere through a drip pipe connected to the port, shown by the dotted lines in the chamber under the piston.

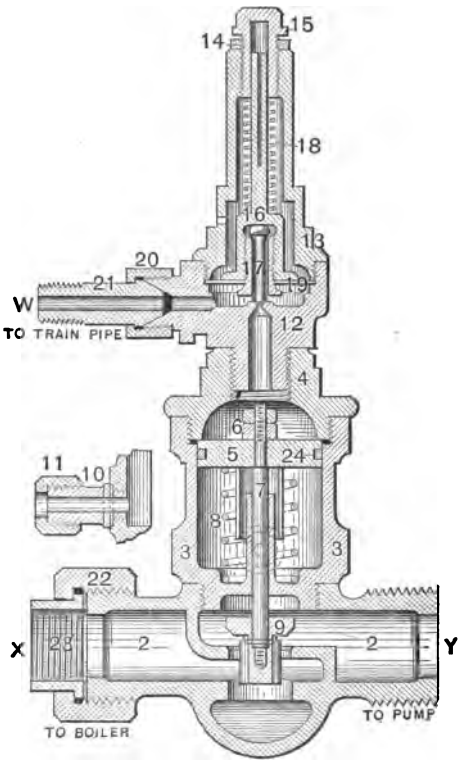


FIG. 43.—OLD STYLE PUMP GOVERNOR.

*Q. Are the troubles about the same with the two governors?*

A. Yes; but there was much trouble with the

diaphragm 19 of the old governor which is unknown with the new.

*Q. Why was this?*

A. Because this governor was used chiefly with the D 8 valve, and train-line pressure operated the governor. With this valve on lap, boiler pressure would be compressed in the main reservoir, and when this high pressure was thrown into the train line to release brakes, the diaphragm 19 would be forced up so high it would buckle.

*Q. What effect would this have?*

A. It would destroy the sensitiveness of the governor, and the pump would be stopped in a very erratic manner. The train-line pressure would sometimes be too high and at others too low.

*Q. How was this defect remedied in the improved governor?*

A. By inspecting the cut of the new governor it will be seen that the diaphragm can raise only a very little distance when it seats against a brass ring, thus doing away with the chance of its buckling.

*Q. Is the new governor more sensitive than the old?*

A. Yes, because instead of one diaphragm, like 19 (Fig. 43) in the old governor, there are two thin diaphragms in the new.

*Q. How much reduction will cause a governor of the improved type to start the pump?*

A. About half a pound.

*Q. Why was the long slot placed in the stem 16 of the old governor?*

A. The governor used to make a buzzing sound, and slotting the stem remedied this trouble.

*Q. Does this governor keep the pump working slowly after full pressure is obtained?*

**A. No, as there is no relief port.**

## THE SWEENEY COMPRESSOR.

*Q. What is the object of the Sweeney device?*

A. To recharge a main reservoir quickly in descending very heavy grades when the air pressure is low.

*Q. Explain the parts.*

A. It consists of a pipe running from the steam chest to the main reservoir. In the pipe there is a cut-out cock, a safety valve, and a non-return check.

*Q. How is it operated?*

A. By turning the cut-out cock and reversing the engine when steam is shut off. The main cylinders and pistons act as compressors, and compressed air is forced into the steam chest and thence through the pipe connection to the main reservoir.

*Q. What is the objection to this device?*

A. It is extremely handy in case of emergency, such as low pressure or the refusal of a pump to work. The objection to it is, that smoke, gas, and heat forced into the main reservoir burn out gaskets and get the brake system very dirty.

## THE WATER BRAKE.

*Q. What is the Water or La Chatelier Brake?*

A. It is a brake by means of which the equivalent effect of reversing an engine is produced; that is, the back pressure on the pistons acts through the pins the same as when using steam.

*Q. Is water actually used at the point where the work of retardation is accomplished?*

A. No, it is then in the form of wet steam.

*Q. Where does the water used come from?*

A. It is taken from the boiler just above the crown sheet. The pressure from above being removed as soon as it leaves the boiler it flashes into wet steam. The compression to which it is subjected in the cylinders produces heat that also tends to change any water into steam.

*Q. Is the lubricator shut off when the water brake is in use?*

A. No, it should be kept in operation the same as when using steam.

*Q. What special care should be taken when using steam after the use of the water brake has been discontinued?*

A. To avoid throwing water out of the stack steam should not be used until the water has had ample time to work out.

*Q. Can a water brake be used on either a simple or compound engine?*

A. Yes; Fig. 44 shows its application to a simple and Figs. 45 and 46 to a compound engine.

WATER BRAKE ON SIMPLE ENGINE.

*Q. What part does the water play after it takes the form of wet steam?*

A. As the pistons move back and forth the wet steam in the exhaust cavities (Fig. 44) is drawn into the cylinders.

*Q. How does it escape from the cylinders?*

A. Through the cylinder cocks.

*Q. If it were not for the wet steam being drawn into the cylinders when the engine is reversed, while using the water brake, what would happen?*

A. Cinders and smoke would be drawn into the cylinders and in a short time they would be cut and ruined.

*Q. How should an engineer proceed to put the water brake in use?*

A. The cylinder cocks should first be opened and should remain open as long as the water brake is in use; the reverse lever should be moved back of the center the desired amount and the globe valve (Fig. 44) should be opened immediately.

*Q. When should the water brake be put in use?*

A. When the train is moving slowly.

*Q At how fast a speed is it practical to operate a water brake?*

A. It is not generally used at speeds in excess of 14 to 22 miles per hour.

*Q. How far should the reverse lever be moved back of the center?*

A. This depends upon the amount of work that is

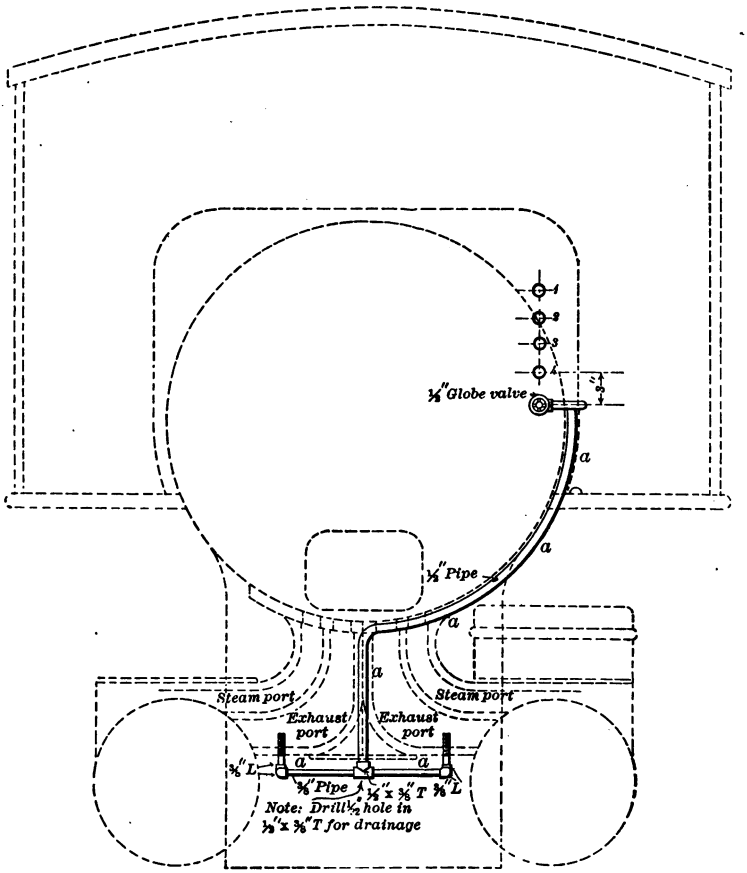


FIG. 44.—WATER BRAKE ON SIMPLE ENGINE.

required. The farther back the lever is moved the greater the power.

*Q. How much should the globe valve (Fig. 44) be open to obtain the right amount of steam in the cylinders?*

A. It should be adjusted until the steam issuing from the cylinder cocks is a dense white.

*Q. What will be the character of escaping steam at the cylinder cocks if too little water is being used?*

A. It will be a light blue in color.

*Q. How can it be told if too much water is being used?*

A. Water will be thrown out of the stack. This is especially noticeable if the lever is very near the center.

*Q. What is the purpose of the 1/32-inch hole drilled in the 1/2 x 3/8-inch tee, as indicated (Fig. 44)?*

A. To permit any condensation to escape.

*Q. In erecting the piping what special care should be observed?*

A. Care should be exercised to locate the ½" x ⅜" tee in the center to insure the same amount of water reaching each cylinder; otherwise the tendency would be for one side of the locomotive to furnish more retarding power than the other.

### THE BALDWIN WATER BRAKE FOR BALDWIN COMPOUNDS.

*Q. Does what has been said in general concerning the water brake for a simple engine also refer to the Baldwin Water Brake?*

A. Yes, and with this as with the other, the holding

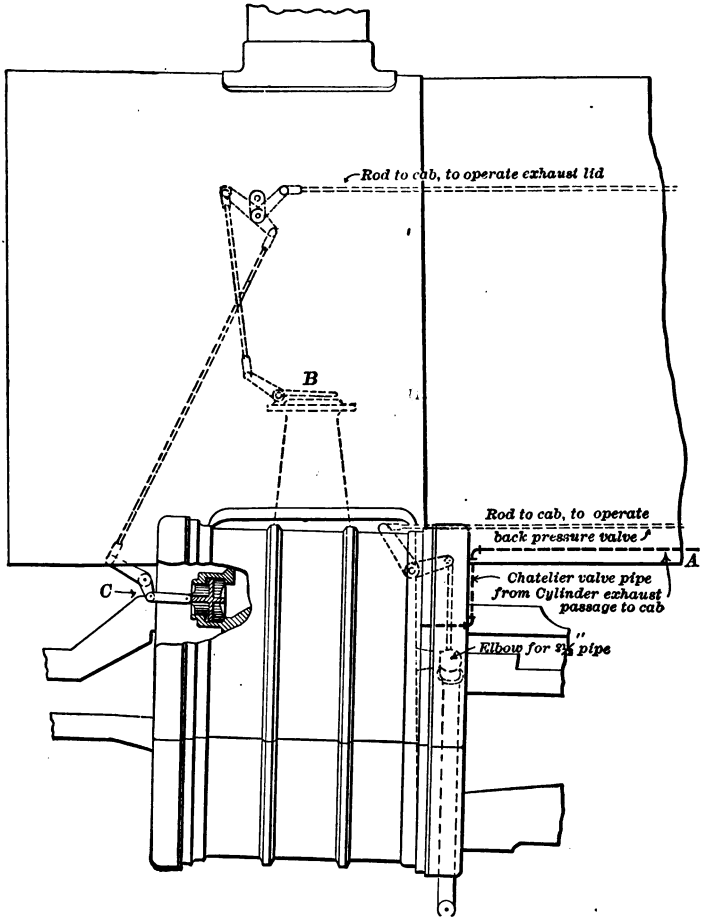


FIG. 45.—BALDWIN WATER BRAKE FOR COMPOUND ENGINE.

power is due to the engine being run reversed, but in full reverse position, the water being used as herein explained.

*Q. Explain the cuts (Figs. 45 and 46) referring to the water brake for compounds.*

A. Fig. 45 is a side view of the front end and Fig. 46 is an end view. When water is permitted to enter pipe *A* (Figs. 45 and 46) it finally reaches *a a*, where it enters the exhaust passages. *D* (Fig. 46) is a gate or back pressure valve, by means of which the engineer can regulate the amount of back pressure against which the pistons will operate. *E* is a safety valve located in the live steamways to permit any back pressure above a given amount to escape. *C* (Figs. 45 and 46) are air inlet valves, which when necessary permit air to enter the cylinders and prevent smoke and cinders from being drawn in. *B* (Fig. 45) is a hinged lid used to close the exhaust nozzle.

*Q. How is the brake put to work?*

A. The initial steps are the same as with the water brake on simple engines: open cylinder cocks, put reverse lever in extreme backward position, and open the water valve. The exhaust nozzle lid *B* should also be closed, and the air inlet valves *C* be opened.

*Q. Trace the passage of the water or steam.*

A. As air enters the inlet valve *C* (Fig. 45) it mingles with the hot water and steam entering the exhaust cavities from *a*, *a*. From here it passes by the piston valve *G* and enters the low pressure cylinder. When the movement of the piston in the low pressure cylinder is reversed this combination of steam, water and air, excepting that which escapes at the cylinder cocks, is compressed while the other end of the cylinder is being filled. The steam being compressed passes by piston *G* and on, as indicated (Fig. 46), into the opposite

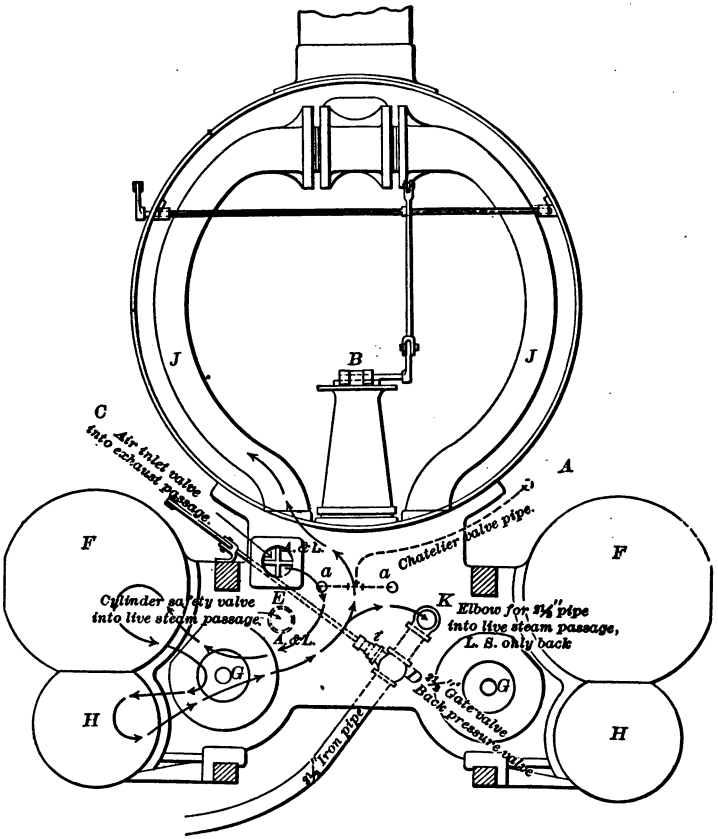


FIG. 46.—BALDWIN WATER BRAKE FOR COMPOUND ENGINE.

end of the high-pressure cylinder *H*. On the return stroke of the piston it is forced from the high-pressure cylinder by the piston valve and on into the steam pipe *J J*, where what does not escape at the back pressure valve *D* accumulates. The safety valves *E* take care of any pressure in excess of a safe amount.

*Q. How is the water brake operated on a two cylinder compound of the Schenectady type?*

A. Generally two water pipes are used on account of the vast difference in the sizes of the two cylinders, and the exhaust valve between the receiver and the low pressure exhaust passage is left closed while using the water brake. Otherwise the water brake is used practically the same as on a simple engine.

## WESTINGHOUSE WHISTLE SIGNAL.

*Q. What form of signal was used before the compressed air signaling apparatus was invented?*

A. The old bell rope and gong signal, such as is now used on freight trains.

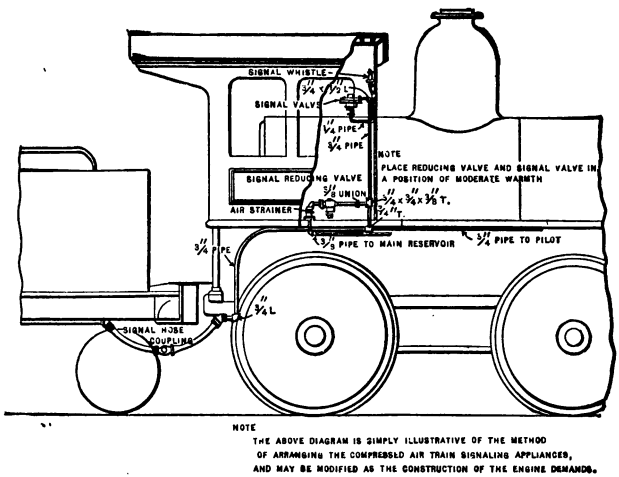


FIG. 47.—SIGNAL EQUIPMENT FOR ENGINE.

*Q. Do all roads use the air signal in passenger service?*

A. Not all, but most roads do.

*Q. What parts of the signaling apparatus are found on the engine?*

A. The strainer, the reducing valve (Fig. 52 or 54), the whistle valve (Fig. 51), the whistle (Fig. 53), and the pipe connections as shown in Fig. 47.

*Q. What parts are found on the car?*

A. The discharge valve (Fig. 50), the signal cord running the length of the car, and the signal-pipe connections as shown in Fig. 48.

*Q. Where is the discharge valve (Fig. 50) usually located?*

A. As shown in Fig. 48, although it is sometimes found inside the car over the door.

*Q. Why is it better placed outside?*

A. When it is so placed the noise of the discharge will not affect nervous people.

*Q. How does the car discharge valve work?*

A. The signal cord is attached to the valve in the hole of 5 (Fig. 50); when the cord is pulled, valve 3 is forced from its seat, allowing whistle-line pressure to escape to the atmosphere.

*Q. What is the trouble when there is a constant leak from the discharge valve?*

A. There is dirt on the seat of valve 3 (Fig. 50).

*Q. Where is the signal valve (Fig. 51) located?*

A. In the cab, where it will not be subjected to severe heat or cold.

*Q. Where are the reducing valves (Figs. 52 and 54) usually placed?*

A. It was formerly customary to locate them outside, next to the main reservoir, but now good practice locates them inside the cab where they cannot freeze in winter.

*Q. Which valve is now being sent out with all new equipment?*

A. The valve represented by Fig. 52, as this is the latest, although there are still many like Fig. 54 in use.

*Q. What is the duty of these valves?*

A. To maintain a constant pressure on the whistle line.

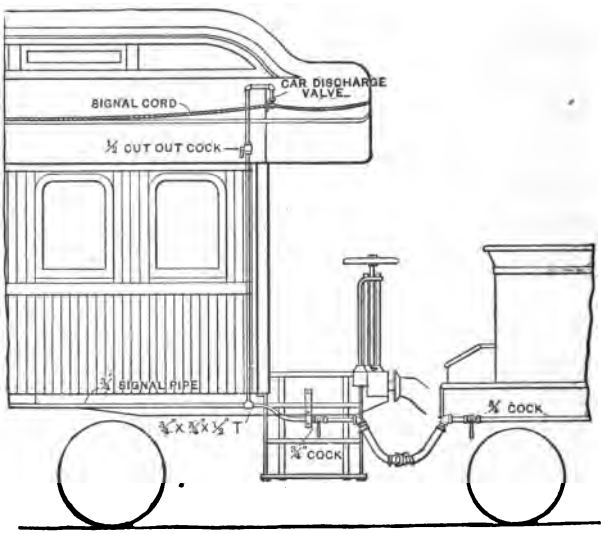


FIG. 48.—LOCATION OF SIGNAL APPARATUS ON COACH.

*Q. Explain the action of the reducing valve (Fig. 52).*

A. It works exactly like the old style train-line governor (Fig. 28), of the F 6 valve already explained.

*Q. Of what use is the plug valve in the upper left-hand corner?*

A. To cut out main reservoir pressure in case we wish to take the reducer apart.

*Q. What is the object of the air strainer (Fig. 49)?*

A. To keep any foreign matter from entering the reducing valve or signal system, where it may occasion an improper response of the signals.

*Q. Of what does this strainer consist?*

A. Of the body 8 (Fig. 49), perforated brass discs 3,

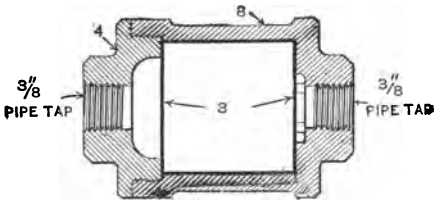


FIG. 49.—AIR STRAINER ON ENGINE.

and the space between these perforated plates is filled with curled hair.

*Q. Has this strainer ever been used to fulfill an office other than as described above?*

A. Yes; a tee is sometimes inserted between the strainer and the reducing valve. A branch of the tee is then piped to the pump governor, and the governor performs the double duty of keeping foreign matter both from the signal system and the pump governor.

*Q. Is any material other than curled hair ever used to fill in the space between the perforated plates 3 (Fig. 49)?*

A. Yes; sponge has been used for this purpose, but the results obtained were not satisfactory. The hair seems to collect the dirt better and it is much easier to clean than the sponge, as it permits of a freer separation.

*Q. Explain the action of the old reducing valve (Fig. 54).*

A. The top spring has a tension determined by the pressure to be carried on the whistle line. This spring holds piston 6 down as long as the tension of the spring is greater than the pressure underneath the rubber diaphragm 7.

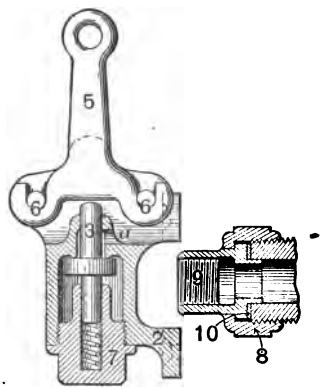


FIG. 50.—CAR DISCHARGE VALVE.

As long as the piston is down, valve 5 is held from its seat, allowing main reservoir pressure to feed in as indicated. It passes by valve 5, up under the piston, and into the signal line as indicated, until the pressure on the whistle line and underneath the diaphragm 7 is greater than the tension of the spring over the piston 6, when the spring is compressed, allowing piston 6 to travel up, and spring 10 raises valve 5 to its seat, shutting off the further passage of air from the main reservoir to the whistle line.

*Q. Where is the whistle (Fig. 53) located?*

A. In the cab, as near the engineer as convenient.

*Q. To what is it connected?*

A. To a pipe which leads from the signal valve as indicated (Fig. 51).

*Q. What is its use?*

A. As the signal or whistle valve (Fig. 51) operates, the air leaving this valve escapes through the whistle (Fig. 53). The blast signals the engineer.

*Q. Where does the air come from that supplies the signal system?*

A. From the main reservoir on the engine.

*Q. Explain the passage of the air from the main reservoir through the signal system.*

A. It first passes from the main reservoir (Fig. 47) through the strainer and reducing valve. After leaving the reducing valve there is a tee in the pipe, one branch of which leads to the signal valve (Fig. 51) and the other back into the train. Under each car (Fig. 48) there is a strainer in a tee, and a branch of the whistle line goes to the discharge valve (Fig. 50).

*Q. Explain the operation of the signal valve (Fig. 51) in charging.*

A. After the air passes from the main reservoir and through the reducing valve, it is free to go back into the train and also enter the signal valve at *Y*. It then passes through the contracted port *d* into cavity *A* on top of the rubber diaphragm 12, and around through port *c*. The lower half of the stem 10 is three sided, so that the air can pass up to where the stem looks to be tight in the bushing 9. This joint is not tight, but sufficiently so to allow the air to feed by into chamber *B* very slowly. The reducing valve is adjusted to forty pounds, and if we wait a short time the forty pounds will equalize on both sides of the diaphragm 12; that is, there will be forty pounds in each chamber *A* and *B*, as there is also throughout the whistle line on the train.

*Q. What does the conductor do if he wishes to signal the engineer?*

A. He pulls the signal cord in the car.

*Q. What is effected by this?*

A. It makes a sudden reduction of whistle-line pressure through the car discharge valve (Fig. 50).

*Q. What is the effect?*

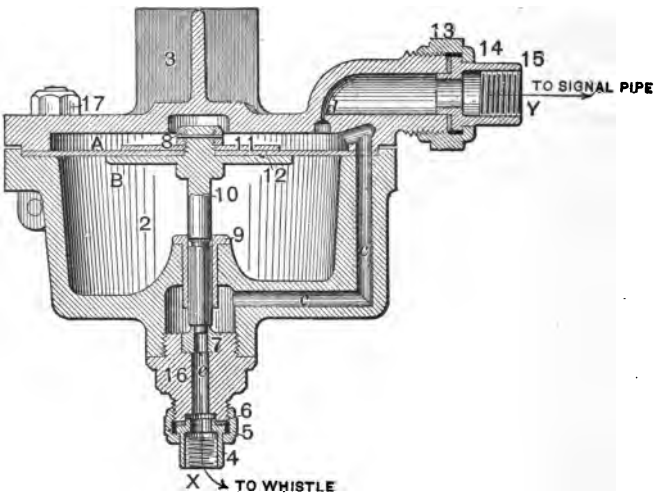


FIG. 51.—SIGNAL VALVE.

A. This starts a reduction wave throughout the whistle line, and in the signal valve it is first felt in chamber *A*, on top of diaphragm 12. The pressure in chamber *B*, being unable to equalize quickly with that in chamber *A*, on account of the snug fit of the stem 10 in bushing 9, is now greater than the pressure in chamber *A*. The diaphragm 12 and the stem 10 attached to it are lifted, uncovering the port in the bushing 7. The stem is lifted sufficiently to allow air from chamber *B* and the air coming through port *c* to pass out at *e* and

through the pipe to the whistle (Fig. 53), causing a blast as long as the stem 10 is off its seat.

The same wave reduction that started the signal valve into operation also opened the reducing valve (Fig. 52 or 54) to allow main reservoir pressure to supply the whistle line.

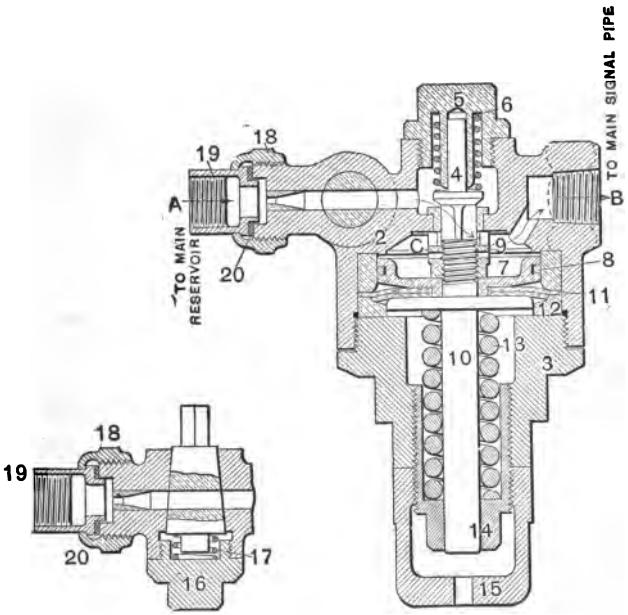


FIG. 52.—IMPROVED REDUCING VALVE.

A wave of increased pressure now takes the place of the reduction wave, and air passing into chamber *A* of the signal valve forces the diaphragm 12 down, causing the whistle to cease blowing.

*Q. How long must we wait before again trying to put the signal valve in operation?*

A. Until the pressures have had time to equalize in chambers *A* and *B* (Fig. 51).

*Q. How many seconds should we wait?*

A. Usually two at least, and three is better.

*Q. Give a rule by which we can pull the whistle signal cord in the car and gain the best results.*

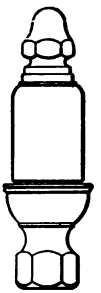

FIG. 53.—SIGNAL WHISTLE.

A. When pulling the cord, make an exhaust of one second, and then wait three seconds to allow the whistle to cease blowing and the pressures to equalize throughout the signal system before making another reduction.

*Q. In pulling the signal cord, what should always be borne in mind?*

A. That it is not the amount of reduction but the suddenness that causes the whistle to blow.

## PECULIARITIES AND TROUBLES OF THE SIGNAL SYSTEM.

*Q. If no air gets into the whistle line when an engine is coupled to a train, and we know that the*

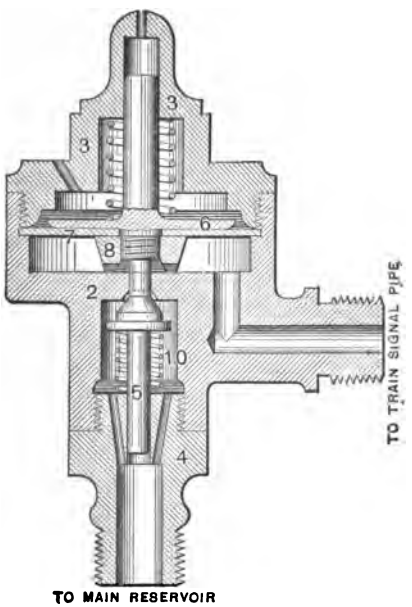


FIG. 54.—OLD STYLE REDUCING VALVE.

*cocks in the signal line stand properly and the hose are in order, what should we look at first?*

A. The plug cock in the reducing valve (Fig. 52);

or, if the weather is cold and the reducer is outside, it may be frozen.

*Q. What else might cause this trouble with the new reducer (Fig. 52)?*

A. It may be that the small taper port in the reducer (Fig. 52), where the main reservoir pressure enters, is plugged shut or the strainer may be blocked.

*Q. What will close this port?*

A. Oil from the air end of the pump and the corrosion from the inside of the pipes.

*Q. What is the trouble if the signal cord is pulled in the car and no air issues from the car discharge valve?*

A. The cut-out cock (Fig. 48) in the saloon has very likely been closed.

*Q. Give conditions that would result in the air whistle not responding.*

A. A dirty strainer in the tee under the car, where the branch pipe to the car discharge valve couples to the main signal line; the strainer in the car discharge valve, as used in the old equipment, being dirty; port *d* (Fig. 51) being stopped up; a too loose fit of stem 10 (Fig. 51) in bushing 9; a baggy diaphragm 12 (Fig. 51), or a hole in it; the bowl of the whistle (Fig. 53) being closed with scouring material, or the bell of the whistle being improperly adjusted; a reduction that took enough air from the whistle line but did not take it fast enough, or, as explained before, the reducer might be frozen.

*Q. Why would the whistle not respond if port d (Fig. 51) were closed?*

A. No air could reach the whistle.

*Q. Why, with a loose fit to stem 10 (Fig. 51) in bushing 9, would the whistle not respond?*

A. If the reduction were not made sufficiently quick with the car discharge valve, especially on a long train, the friction of the air passing through the pipe would tend to decrease the suddenness of the reduction, so that, when the wave reached the signal valve, the reduction might be so weak that, if stem 10 were a loose fit in bushing 9, the air in chambers *A* and *B* might equalize without raising diaphragm 12 (Fig. 51).

*Q. Why would a baggy or stretched diaphragm 12 (Fig. 51) cause the whistle not to respond?*

A. When the reduction is made on the signal line, a reduction is made in chamber *A* of the signal valve, leaving the pressure in chamber *B* greater. If the diaphragm is bagged, the pressure in chamber *B* lifts the diaphragm, but the stem 10 is not moved.

*Q. What causes this diaphragm to bag?*

A. The use of poor rubber, or oil from the pump working through on the rubber, causing it to decay. A diaphragm is occasionally found with a hole rotted through it, allowing chambers *A* and *B* to be directly connected.

*Q. What may cause a whistle to respond only once when the conductor pulls the cord twice?*

A. He may have pulled the cord the second time before the whistle stopped blowing the first, thus getting one long blow, or he may have made the second discharge before the pressures in chambers *A* and *B* had become equalized.

*Q. What will happen if dirt gets on the seat of valve 4 (Fig. 52), or the corresponding valve in Fig. 54?*

A. The valves cannot close, and we will get main reservoir pressure of ninety pounds on the whistle line.

*Q. What effect has this?*

A. The whistle is likely to blow, especially on a short train, when the brakes are released; the air whistle on the engine will screech when used; and, if the stem 10 in the signal valve is a little loose in bushing 9 (Fig. 51), the whistle is likely to blow two or three times for one reduction at the car discharge valve; there will be a stronger exhaust from the car discharge valve than usual, and hose are more likely to burst.

*Q. Why is the whistle likely to blow when the brakes are released, if there is main reservoir pressure on the whistle line?*

A. Because to release brakes the main reservoir pressure is thrown into the train line. This makes the pressure in the main reservoir less than that in the whistle line, and, on account of the dirt on the seat of the valve 4 (Fig. 52), the whistle-line pressure feeds back into the main reservoir, and the reduction thus made on the signal line causes the air whistle to blow.

*Q. Why, with this trouble, is the whistle more likely to sound on an engine alone than with a train, when the brakes are released?*

A. With an engine alone there is but a small volume of air on the signal line, and the signal-line pressure feeding back into the main reservoir would cause a more sudden reduction than if the signal line were longer and the volume greater, as on a train.

*Q. Why will the air whistle on the engine screech when used?*

A. Because the bell is adjusted to be used with only a forty-pound pressure instead of ninety.

*Q. Why is the whistle likely to blow two or three times with one reduction from the car discharge valve, if main reservoir pressure is on the whistle*

*line and the stem 10 is loose in bushing 9 (Fig. 51) of the signal valve?*

A. Because a reduction at the car discharge valve starts the signal valve in operation, and the reducer cannot feed air into the whistle line properly to cause the signal valve to close until the signal-line pressure is below forty pounds. The tendency for the pressure to fluctuate in chambers *A* and *B*, due to the loose fit of the stem 10, causes the diaphragm to bounce and the whistle to respond two or three times.

*Q. If an engineer wishes to know how much pressure he has on his signal line, and he has no gauge with which to test it, how can he determine it?*

A. Shut off the pump and open the bleed cock on the main reservoir, then get up in the cab and watch the red hand. When the whistle blows, the red hand represents a trifle less pressure than is being carried on the whistle line.

*Q. Why does the whistle blow?*

A. Because, when the main reservoir pressure is drained below the pressure on the whistle line, the pressure feeds from the whistle line back into the main reservoir, causing a reduction of the whistle-line pressure, and this usually causes the whistle to blow.

*Q. What is likely to make a whistle give one long blast?*

A. A tight fit in bushing 9 of stem 10 (Fig. 51).

*Q. Why was the new reducer gotten up?*

A. To have one that would be more sensitive than the old one and would feed leaks more promptly, thus doing away with the chance of the whistle being blown by a small leak.

*Q. What will cause a whistle to sing constantly?*

A. Dirt on the seat of stem 10 in bushing 7 (Fig. 51).

*Q. Why may jars cause a whistle to blow?*

A. Oil baking upon diaphragm 12 of the signal valve makes it rigid, and a jar will sometimes shake the stem 10 (Fig. 51) from its seat.

*Q. What would we do to increase or decrease the pressure on the whistle line with the new reducer?*

A. Screw up on the bottom nut to increase it, and down to decrease it.

*Q. What with the old reducer?*

A. Put in a stiffer spring or put a washer under the old one.

*Q. What are the two holes for in the upper part of the old reducer?*

A. To allow any air to escape to the atmosphere that gets by the diaphragm 7.

## WESTINGHOUSE HIGH-SPEED BRAKE.

*Q. Why was the introduction of the high-speed brake necessary?*

A. The call by the traveling public for higher train speed rendered it necessary to insure safety of lives and property.

*Q. How much more efficient is it than the ordinary quick-action brake?*

A. About thirty per cent.

*Q. What class of trains uses this brake?*

A. It is being introduced very generally in both local and through passenger train service on the principal trunk lines.

*Q. What percentage of braking power to the light weight of a passenger car is generally used with the ordinary quick-action brake?*

A. Ninety per cent.

*Q. What percentage is used with the high-speed brake?*

A. About one hundred and thirty per cent. if the cylinder pressure is figured as 88 pounds, and ninety per cent. with a 60-pound cylinder pressure.

*Q. How can such a high braking power be used without flattening wheels?*

A. Because it is only used when the train is moving at very fast speed, and an automatic reducing valve gradually reduces the brake-cylinder pressure, so that when the speed of the train has been slackened, the brake-cylinder pressure has also been gradually reduced to the

60-pound pressure limit as used with the ordinary quick-action brake.

*Q. Why is it safe to use a higher braking power on wheels when the train is running fast?*

A. Because the faster the wheels turn, the greater is the inertia of the wheels, which the friction of the brake shoes has to overcome before they will cease revolving. The Westinghouse-Galton tests, made in England in 1878, proved that the faster the tread of the wheel moved against the brake shoe, the less the friction between the two. As the speed decreases the friction increases, the friction between the wheel and the rail remaining about constant, regardless of the speed of the train.

*Q. What train-line and auxiliary pressures are carried with the high-speed brake?*

A. One hundred and ten pounds.

*Q. At what pressure do the auxiliary and brake cylinder equalize when the brake is full set in emergency, using one hundred and ten pounds auxiliary pressure?*

A. About eighty-eight pounds.

*Q. What reduces this eighty-eight pounds to sixty pounds, the safe pressure for slow speeds?*

A. The automatic reducing valve shown in the accompanying cut (Fig. 55).

*Q. Explain the action of the reducing valve.*

A. When air is in the brake cylinder it is free to reach the top of piston 4 of the reducing valve.

As long as the tension of the spring 11 is greater than the brake-cylinder pressure on top of the piston, the slide valve 8 remains in the position shown.

When the brake is full set, the pressure in the cylin-

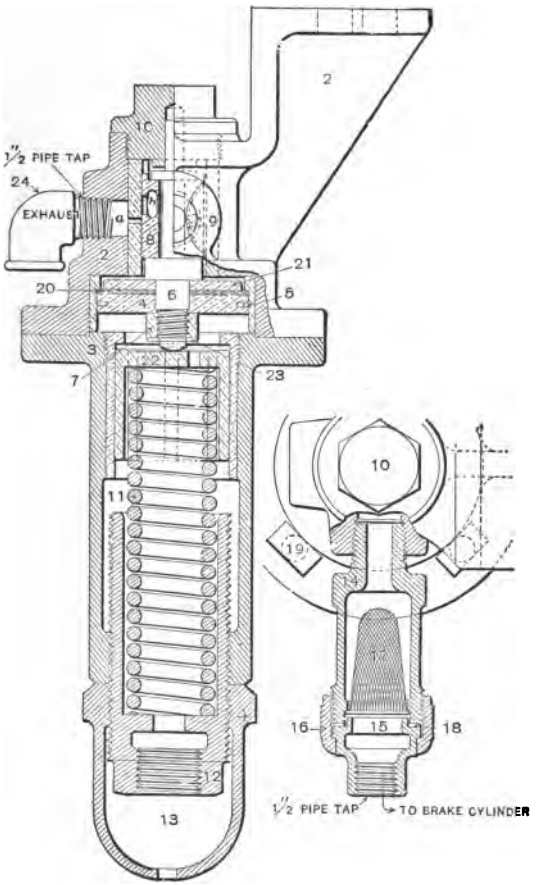


FIG. 55.—HIGH-SPEED AUTOMATIC REDUCING VALVE.

der being greater than the tension of the spring, the piston 4 is forced down and carries the slide valve with it, thus opening port *b* into port *a*, allowing brake-cylinder pressure to escape to the atmosphere.

The apex of the triangular port *b* points up. If the slide valve 8 is drawn down a little, as in a service application, port *b* has a wide opening into port *a*, allowing cylinder pressure to escape quickly. The high cylinder pressure in emergency forces piston 4 down full stroke, and cylinder pressure escapes slowly through the small end of port *b*. As cylinder pressure lessens, spring 11 raises piston 4 and slide valve 8, opening port *b* wider, thus releasing air faster; the slow exhaust ensues with a high, and quick exhaust with low train speeds. Spring 11 is adjusted to sixty pounds on passenger cars and sixty on engines and tenders.

*Q. What is necessary to make a high-speed brake out of the present quick-action equipment?*

A. Simply the addition of the reducing valve.

*Q. What change has to be made on engines?*

A. A duplex pump governor is added, two train-line governors are used, and reducing valves are connected to the tender and driver brake cylinders.

*Q. Why are two train-line and a duplex pump governor used?*

A. Only two governors are used at a time. They are so arranged with cut-out cocks that the engine may be used with the "high-speed" brake or with the ordinary quick-action brake.

*Q. At the same speeds, in how much less distance can a stop be made with the High-Speed than with the ordinary Quick-Action Brake?*

A. About 30 per cent.

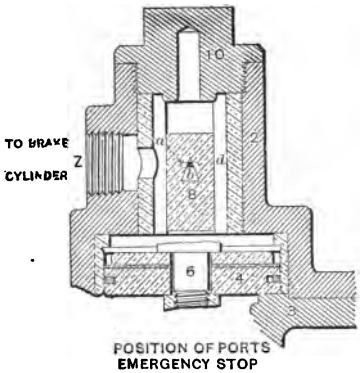


FIG. 56.

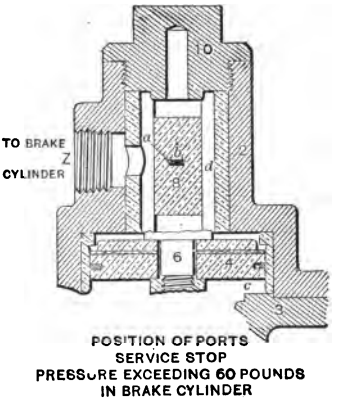


FIG. 57.

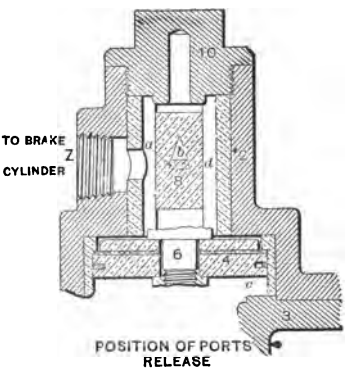


FIG. 58.

CROSS SECTIONS SHOWING UPPER PART OF HIGH-SPEED REDUCING VALVE IN ITS DIFFERENT POSITIONS.

*Q. With an auxiliary reservoir pressure of 110 pounds, is a higher cylinder pressure developed than when 70 pounds is used if a 5, 10 or 15-pound service reduction of train-line pressure is made?*

A. With the customary piston travel of from six to eight inches the same cylinder pressure would result in either case.

*Q. Would the cylinder pressure developed be the same with a gradual train-line reduction of 22 pounds?*

A. No, the cylinder pressure would be greater when using a train-line pressure of 110 pounds.

*Q. Give a rule which covers this point.*

A. As long as train-line reductions are not continued after the equalization point between the cylinder and reservoir when the 70-pound train-line pressure has been reached, the same cylinder pressure will result in either case. If, however, the reductions are continued beyond this point, a gain is made when using the higher pressure, and it can be raised until such time as the High-Speed Reducing Valve operates to discharge air to the atmosphere.

*Q. Why is it that the cylinder pressure would be the same in either case with a service reduction of 10 pounds when employing either a 70 or 110-pound pressure?*

A. By making the proper calculations it will be found that in either case the same number of cubic inches of free air has passed to the brake cylinder. In other words, the same number of cubic feet of free air are used by reducing the auxiliary reservoir pressure from 70 to 60 as from 110 to 100 pounds.

A 20-pound reduction, using a 70-pound train-line pressure, would equalize the reservoir and cylinder

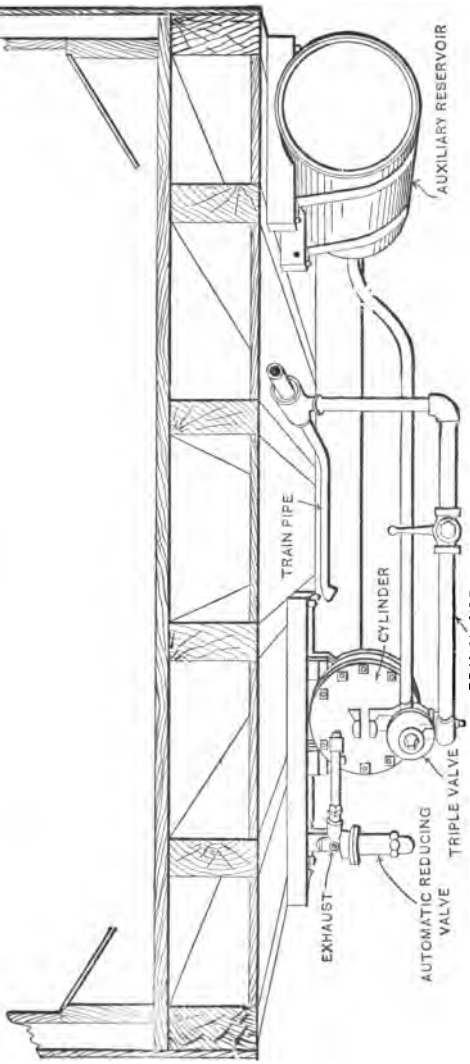


FIG. 59.—SHOWING LOCATION OF HIGH-SPEED AUTOMATIC REDUCING VALVE UNDER CAR.

pressures at 50 pounds with a certain piston travel; using the 110-pound train-line pressure and making a 20-pound reduction would give a cylinder pressure of 50 pounds, but there would still be 90 pounds in the auxiliary reservoir; hence, with a further reduction of train-line pressure the triple valve would permit more reservoir pressure to pass to the brake cylinder, thus increasing its pressure.

*Q. Do the brakes apply any quicker in service with the High-Speed than with the Quick-Action Brake?*

A. Yes.

*Q. Explain the answer to the last question.*

A. On account of the higher pressure used the air passes through the ports quicker from the auxiliary reservoir to the brake cylinder. Practically the same effect is produced as is done by increasing the boiler pressure of an engine, which added pressure produces a corresponding quickness of action. It is this quickness of action which has created the general impression that a light reduction of train-line pressure produces a greater cylinder pressure when using a 110-pound instead of a 70-pound pressure. This is a mistaken idea, except as there might be a very slight difference because of the piston moving out and closing the leakage groove quicker with the high than with the low pressure.

*Q. Which method produces the best results in making station stops with the High-Speed Brake?*

A. The two application method, the same as should be used when employing the 70-pound train-line pressure.

*Q. If, when using the 110-pound train-line pressure, a sudden reduction of pressure is made and the brake valve handle is returned to lap, at what*

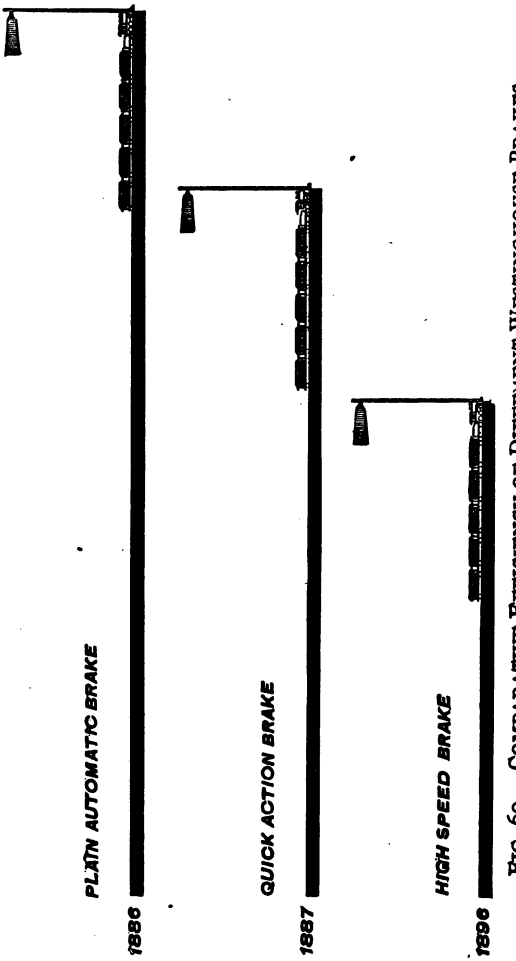


FIG. 60.—COMPARATIVE EFFICIENCY OF DIFFERENT WESTINGHOUSE BRAKES.

*pressure will the train-line auxiliary and brake cylinder equalize?*

A. Approximately 88 pounds.

*Q. The triple valve is now in emergency position and the auxiliary and cylinder pressures are escaping to the atmosphere through the reducing valve, which closes when the pressure in it has been depleted to 60 pounds. The train-line pressure is still approximately 85 pounds; will this pressure not force the triple piston to release position and release the brake entirely?*

A. No; as soon as the reservoir pressure is slightly less than the train-line pressure, plus the tension of the graduating spring, the triple piston is forced to lap position, in which position no more reservoir pressure can reach the brake cylinder. The reducing valve continues to reduce cylinder pressure until it closes when this pressure has reached 60 pounds.

A corresponding action takes place in response to a gradual and heavy train-line reduction, sufficient to cause the reducing valve to open and the triple piston to move to emergency position and compress the graduating spring.

*Q. Is the cylinder pressure reduced to 60 pounds under these conditions?*

A. Yes.

*Q. What is a great advantage of the High-Speed Brake other than those already outlined?*

A. Two full service reductions of 20 pounds and releases can be made without permitting any recharge of the auxiliary reservoir and there will still be 70 pounds pressure available with which to stop, if necessary.

ENGINE

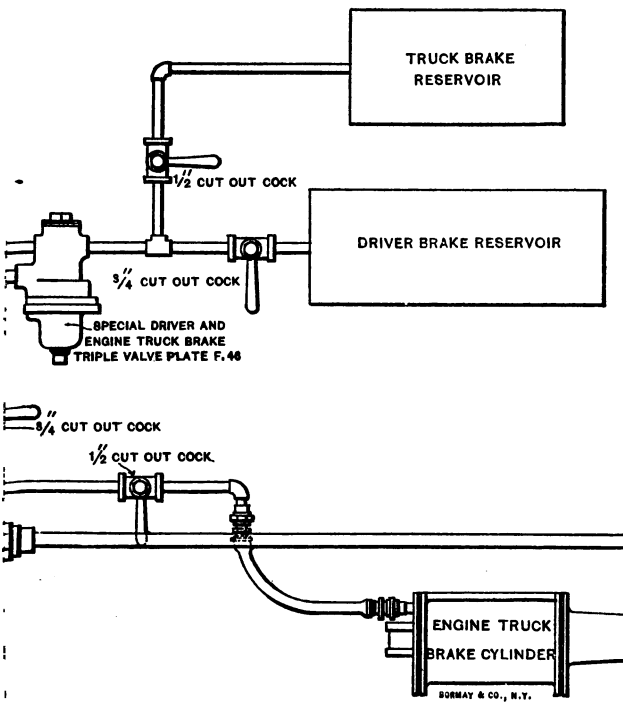
TRUCK BRAKE RESERVOIR
1/2" CUT OUT COCK
DRIVER BRAKE RESERVOIR
3/4" CUT OUT COCK
SPECIAL DRIVER AND ENGINE TRUCK BRAKE TRIPLE VALVE PLATE F.46
3/4" CUT OUT COCK
1/2" CUT OUT COCK
ENGINE TRUCK BRAKE CYLINDER
BORMAY & CO., N.Y.

OF
CALIFORNIA

*Q. How often should the High-Speed Reducing Valve be cleaned?*

A. Once a year when used on cars, and once in six months when used on engines and tenders.

*Q. What kind of oil should be used for lubricating purposes?*

A. A high grade mineral oil.

*Q. How can a High-Speed Reducing Valve be taken apart so that it can be put together without changing the adjustment of the regulating spring?*

A. Do not remove the cap nut. The lower case can be removed and replaced without disturbing this part of the mechanism.

*Q. If the braking power on a car is designed for 90 per cent. of its light weight when using a train-line pressure of 70 pounds, what braking power will be developed with an emergency application of the High-Speed Brake at the moment of maximum cylinder pressure?*

A. Approximately 130 per cent.

The cut (Fig. 60) gives an idea of the advancement in air-brake appliances. The three figures (page 193) represent, by scale, stops made by the same train going at the same rate of speed, but equipped as indicated.

It takes about twice as far to stop a train going at forty, three times going at fifty, and about five times going at sixty miles an hour, as it does if the speed of the train is thirty miles an hour with the Quick-Action Brake.

COMPARATIVE STOPS MADE WITH HIGH-SPEED AND QUICK-ACTION BRAKES.

| Speed. | Stop in Feet. | | Quick Action Per Cent. Less Efficient. | Feet in Favor of High-Speed Brake. |
|---|---|---|---|---|
| | High-Speed. | Quick Action. | | |
| 45 | 560 | 710 | 26.8 | 150 |
| 50 | 705 | 880 | 24.8 | 175 |
| 60 | 1060 | 1360 | 28.3 | 300 |
| 70 | 1560 | 2020 | 29.5 | 460 |
| 80 | 2240 | 2780 | 24.1 | 540 |

Train-line pressure used with High-Speed Brake, 110 pounds.
Train-line pressure used with Quick-Action Brake, 70 pounds.

The above table refers to stops made with chilled cast-iron wheels and soft cast-iron shoes with a train which was supposed to represent average conditions of service.

## HIGH-PRESSURE CONTROL OR SCHEDULE U.

*Q. What does Plate X represent?*

A. The High-Pressure Control or Schedule U Equipment sometimes used on freight engines.

*Q. How does it differ from the high-speed engine equipment?*

A. In the engine equipment for the high-speed brake, the governor pipe containing the one-quarter inch cut-out cock connects with the pipe running to the other governor, and reducing valves are used instead of safety valves.

*Q. What is the object of this special equipment?*

A. It is designed for special use on roads having heavy grades and handling loads, such as ore, down the grade, and empty cars up.

*Q. What special advantage is gained?*

A. By using two sets of pump and train-line governors, 70 or 90 pounds can be used on the train line, and 90 or 110 pounds can be used on the main reservoir.

*Q. Would there not be danger of sliding wheels if 90 pounds were used as train-line pressure?*

A. If used on empty cars, yes; but if used on heavily loaded cars there would be no danger, as the braking power is usually 70 per cent. of the light weight of the car, and when a car is loaded to its full capacity, the percentage of braking power, as compared with the combined weight of the car and its contents, is much smaller than this, even when using a train-line pressure of 90 pounds.

*Q. How much more powerful would a brake be when using a train-line pressure of 90 pounds as compared with 70?*

A. Approximately 25 per cent.

*Q. With the cocks as shown in Plate X, which governors are operative?*

A. The 90-pound pump governor and the 70-pound feed valve or train-line governor.

*Q. What is the object of running a governor pipe to the feed valve bracket chamber instead of in the manner adopted with the High-Speed Brake?*

A. The feed-valve bracket chamber, into which pipe *A* connects, has main reservoir pressure in it, as is shown. The 90-pound governor being cut in, the pump will be stopped as soon as the main reservoir pressure reaches 90 pounds. If the brakes are applied and the brake valve is placed on lap position, no more air can pass to the feed-valve bracket, and thence to the governor to keep the steam valve shut and the pump stopped, and the pump will continue to work until main reservoir pressure reaches 110 pounds, at which time the other governor, always connected with main reservoir pressure, as shown, stops the pump.

*Q. What benefit is derived from this device when the 70-pound train-line and 90-pound pump governors are cut in?*

A. With the brake valve in running position, the pump does not have to work against a higher pressure than 90 pounds, but just as soon as the brakes are applied the pump raises the pressure in the main reservoir to 110 pounds, which pressure is very helpful to insure a quick release on a long train and quickly recharge the auxiliaries.

*Q. What would be done in case the cars were*

*all heavily loaded and it was desired to use a train-line pressure of 90 pounds and a main reservoir pressure of 110 pounds?*

A. The reversing cock handle would be moved so as to cut out the 70-pound train-line governor and cut in the 90-pound train-line governor.

*Q. Would it be safe to use the 90-pound train-*

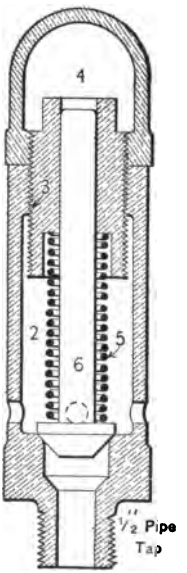


FIG. 61.—SAFETY VALVE.

*line pressure when there were air brakes on both light and loaded cars in operation in the same train?*

A. No; in all probability the wheels on the light cars would be slid, if a heavy train pipe reduction were made.

*Q. When using a 90-pound train-line pressure, is the same train-line reduction necessary to apply the brakes in full as is used with a 70-pound train-line pressure?*

A. No; a heavier reduction would be necessary.

*Q. How much of a train-line reauction would equalize the auxiliary and brake-cylinder pressures, using an initial pressure of 90 pounds?*

A. About 27 pounds, if the piston travel were approximately eight inches.

*Q. Why are safety valves placed upon the tender, driver, and truck brakes?*

A. So as to allow all pressure over 50 pounds to escape to the atmosphere. Experience shows that overheating of tires is likely to ensue if a greater pressure than this is used on the tender, driver or truck brakes.

*Q. What is best to use on the engine if the grade is very long and heavy?*

A. A water brake. With this brake no heating of tires is produced, as the braking is done with the pistons in the main cylinders.

*Q. With a train-line pressure of 90 pounds, is any more braking power developed with a 5, 10 or 15-pound service reduction than if 70 pounds was carried on the train-line?*

A. No; no gain will be made unless train-line reductions are continued after the point has been reached at which the reservoir and brake cylinder pressures would equalize when using the 70-pound train-line pressure.

OF THE
UNIVERSI

## WESTINGHOUSE COMBINED AUTOMATIC AND STRAIGHT AIR-BRAKE EQUIPMENT FOR ENGINES AND TENDERS.

*Q. For what purpose was this equipment designed?*

A. For use on engines and tenders in yard and freight service.

*Q. Why is it necessary on yard engines?*

A. Because a triple valve will not recharge the auxiliary reservoir between very frequent brake applications; as a result it is necessary for the engineer to make a great many stops with the reverse lever. Reversing an engine tends to draw cinders into the cylinders, where they cut the cylinders and packing. The brake on a switch engine should be such that it can be used as often as desirable and always have the maximum power available. Using the brake constantly also keeps the tires in much better condition. A quick release is possible with the straight air and, if desired, the brake can be partially released.

*Q. Of what use is it on road engines?*

A. Aside from the advantages stated above, while switching, it provides a means of bunching slack, permits slow-ups to be made to pick up a flag, can be used, if desired, to help retard the speed of the train while recharging in descending grades; also in slowing up at times when much braking power is not required, and where it is unnecessary to waste the air to apply the brakes on all the cars and thus put needless work upon

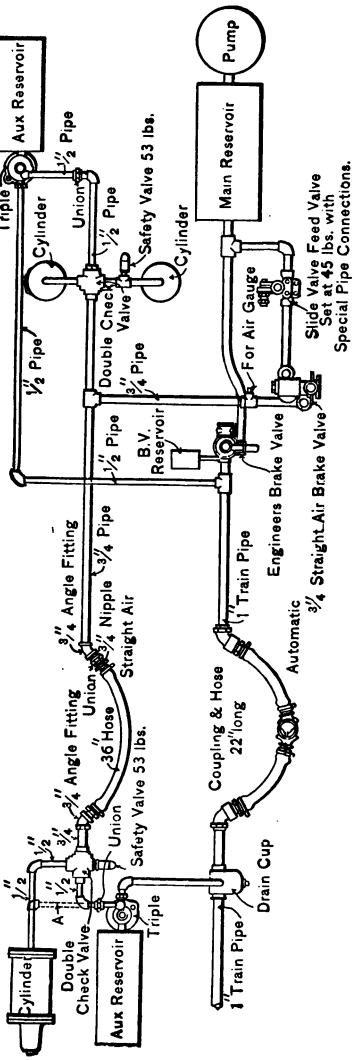


FIG. 62.—WESTINGHOUSE COMBINED AUTOMATIC AND STRAIGHT-AIR BRAKE.

the pump; and it can be used to meet many similar conditions encountered in road service.

*Q. Does this brake operate entirely separate from the automatic, and is there no danger of obtaining too much braking power if one is used without first releasing the other?*

A. Each is entirely independent of the other, and the safety valves placed in the pipes leading to the driver and tender brake cylinders will permit only the predetermined amount of pressure considered suitable for maximum braking power.

*Q. What are the parts necessary to add to the standard engine and tender equipment?*

A. As illustrated in Fig. 62, it is necessary to apply on the engine a Slide-Valve Reducing-Valve, a ¾" Straight-Air Brake Valve, a Safety Valve set at 53 pounds, and a double check valve. On the tender the additional parts consist of a double check valve, a safety valve set at 53 pounds, and one 36-inch hose, with union, angle fittings and nipples.

*Q. What is the object of the Slide-Valve Reducing Valve?*

A. To reduce main reservoir pressure to 45 pounds, that being considered proper with the straight air brake.

*Q. What positions has the Straight-Air Valve?*

A. Release, application and lap positions. In release position cylinder pressure is exhausted direct to the atmosphere; in application position main reservoir pressure, reduced to 45 pounds, passes through the brake valve to the double check valves and thence to the cylinders.

*Q. Explain the mechanism of the double check valve (Fig. 63).*

A. It consists of a double piston with a leather face on each. When air comes from the triple valve it forces the pistons to such a position that no air can enter through the straight air pipe; a set of ports is also opened to permit the air coming from the triple valve

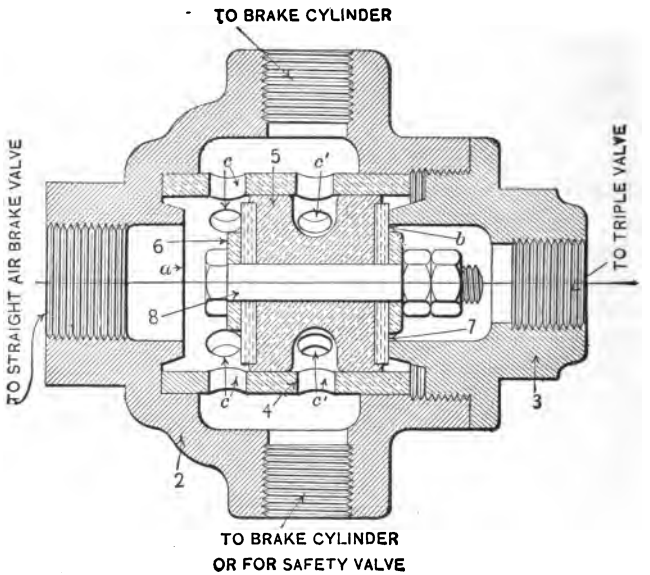


FIG. 63.—DOUBLE CHECK VALVE.

to flow to the brake cylinder. When the straight air is used the opposite effects are produced; that is, the pistons blank the port connection to the triple valve and open a port connection from the straight air pipe to the cylinder.

*Q. What is the object of the safety valve (Fig. 62)?*

A. If the reducing valve did not reduce the pressure properly, owing to its being in poor condition, or if the automatic brake were used without first releasing the straight-air brake, the safety valve would allow any pressure in excess of 53 pounds to escape.

*Q. If the straight-air brake is left partially applied and the automatic is then applied, what will be the result?*

A. Nothing unusual will be noticed until the engineer tries to release the automatic, at which time, as soon as the pressure in the pipe between the triple and double check valve is less than that between the straight-air valve and double check valve, the pistons in the double check valve will move over so as to stop the escape of air through the triple and establish a connection between the straight-air valve and cylinder.

*Q. How then may the brakes be released?*

A. By placing the straight-air valve in release position, where it should always be when the automatic brake is in use.

*Q. Where should the handle of the Engineer's Brake Valve be placed when the straight-air is in use?*

A. In Running Position.

*Q. If the automatic brake is partially applied and the straight-air is then used, what will be the result?*

A. As just described, with the opposite conditions, the brake could not be released on the engine and tender without putting the Engineer's Brake Valve of the automatic system in Running or Release Position.

The following directions, if properly followed, will produce best results:

1. Always keep both brakes cut in and ready for operation, unless failure of some part requires cutting out.

2. Always carry an excess pressure in the main reservoir, as this is necessary to insure a uniformly satisfactory operation.

3. When using automatic keep straight-air brake valve in release position, and when using straight-air keep the automatic valve in running position; this to avoid sticking of the driver and tender brakes.

4. Automatic must not be used while straight-air is applied; if desirous of using the automatic, first release the straight-air.

5. Though the use of straight-air while automatic is applied will not increase the driver and tender brake cylinder pressure above 45 pounds, yet release of either cannot be assured while the other brake valve is on lap or application position.

6. Bear in mind that the straight-air on the driver and tender brakes is almost as powerful as the automatic brakes on same, and that each should be used with care to avoid rough handling of the train, or in holding down long grades, loosening of tires on drivers.

7. The straight-air reducing valve should be kept adjusted to 45 pounds and the driver and tender safety valves at 53 pounds. Where a full application of the straight-air causes either or both safety valves to operate, it indicates too high adjustment of reducing valve or too low adjustment of safety valves. Have them tested and adjusted.

### STRAIGHT-AIR BRAKE VALVE.

*Q. What is the valve shown in Figs. 64, 65, 66, 67 and 68, and with what is it used?*

A. It is known as the Straight-Air Brake Valve; it

is the valve used in connection with the Combined Automatic and Straight-Air Brake.

*Q. What do the different views represent?*

A. Fig. 66, a side view of the outside of the valve; the view (Fig. 68) is a horizontal cross-section through *F F* (Fig. 66); Fig. 67 is a vertical cross-section; Fig. 64, an end section showing the valve that controls the flow of pressure coming from the main reservoir; and Fig. 65 is an end section through a plane which permits the valve controlling the exhaust to be seen.

*Q. Name the different parts of the valve.*

A. 1 is the valve body; 2, the valve shaft; 3, one of the two tappet pieces held to the shaft by rivets; 4, the handle; 5, the quadrant; 6, the shaft washer, which is of leather; 7, the shaft spring, which holds the collar of the shaft against the leather washer, thus making an air-tight joint; 8, the valve which controls main reservoir pressure; 9, the one controlling the escape of air to the atmosphere from the brake cylinder; 10 and 11, the check valve springs; 12 and 13, the valve caps; 14, the shaft cap nut; 15, the handle screw; 16, the handle latch; and 17, the latch spring.

*Q. The valves 8 and 9 control the flow of air through the brake valve; how are these valves controlled?*

A. By the handle 4 acting through the shaft 2. As the handle is moved the shaft starts to rotate, thus causing one of the tappet pieces 3 (Figs. 64 and 65) to engage the stem of either valve 8 or 9, according to the direction in which handle 4 is moved. If moved to the right (Fig. 65) valve 8 is unseated; if moved to the left valve 9 (Fig. 65) is unseated. The shaft, as shown in Figs. 64, 65 and 67, is cut away in two places; at the bottom of each of the slots a tappet piece is fastened with two rivets.

*Q. What is the object of the tappet piece?*

A. The shaft could be designed to come in contact with the valve stems, but the steel tappet pieces present

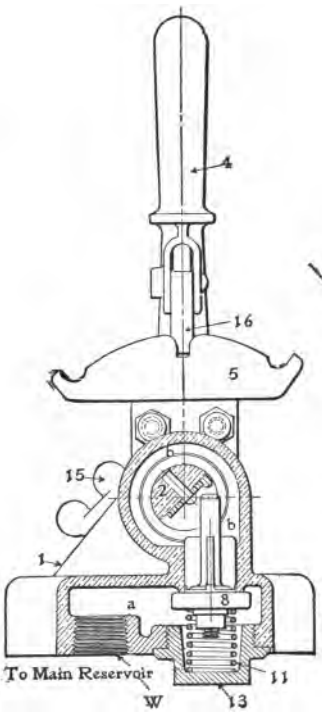


FIG. 64.

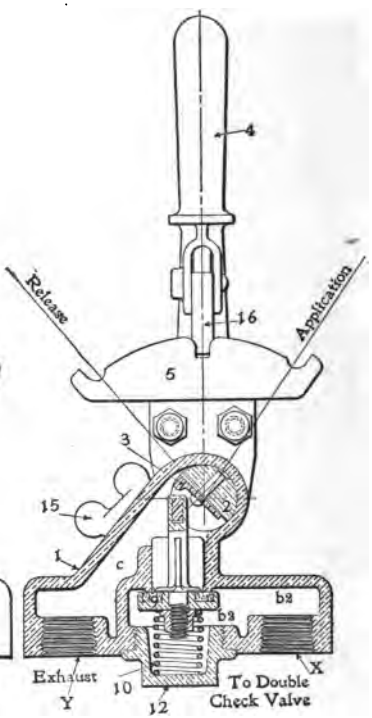


FIG. 65.

STRAIGHT-AIR BRAKE VALVE.

a better wearing surface, as do also the steel pins inserted at the top of the stems of valves 8 and 9 (Fig. 67).

*Q. Where is the Straight-Air Brake Valve usually located?*

A. On the side of the cab within convenient reach of the engineer.

*Q. In what three positions may the handle of the valve be placed?*

A. Release, application and lap.

FIG. 68.

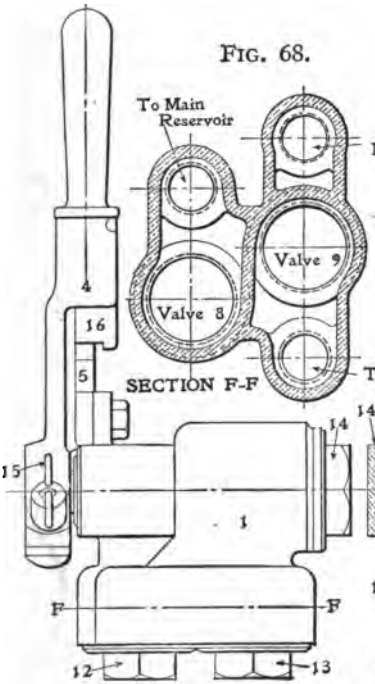


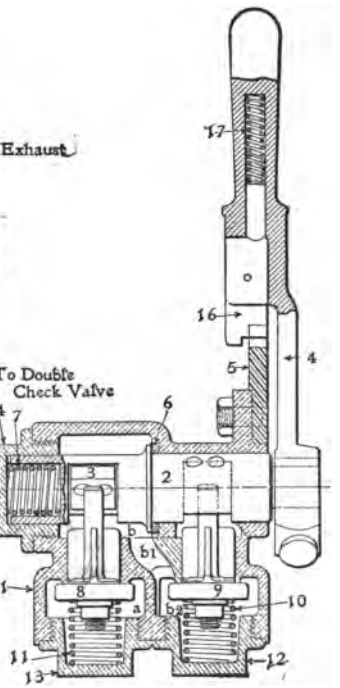

FIG. 66. FIG. 67.

STRAIGHT-AIR BRAKE VALVE.

*Q. Explain these positions.*

A. As shown in Fig. 65 it is on lap; moved to the right it is in application or service position; and to the left it is in release position.

*Q. Can the brakes be applied gradually and released gradually with this brake valve?*

A. Yes; a quick release or application is obtained when the valve handle is moved to either of the extreme positions shown. To obtain a gradual effect the handle of the valve should be moved a distance not sufficient to obtain the full movement of the valves. This can be told by the feeling when applying the brake, and by the sound as well as the feeling when making a release.

*Q. What connections has the brake valve?*

A. It has three and, as indicated, they connect with the main reservoir at *W*; the trainpipe, or the one leading to the double check valve, at *X* (Fig. 65); and to the exhaust at *Y*.

*Q Explain the passage of air through the brake valve when the handle is placed in application position.*

A. When the valve handle is moved to the right the tappet piece in the shaft engages the stem of valve 8, forcing the valve from its seat against the pressure beneath it and the tension of spring 11. Air which comes from the main reservoir through the reducing valve (Fig. 62) enters the brake valve at *W* (Fig. 64) and passes up by the unseated valve 8 into chamber *b*, thence through port $b^1$ (Fig. 67) into chamber $b^2$ and out at *X* (Fig. 65) into the pipe which leads to the double check valves (Fig. 62), and through these valves to the brake cylinders.

*Q. When the valve handle is moved to lap, after sufficient braking power has been obtained, what closes valve 8 on its seat?*

A. In this position the stem of valve 8 is clear of the tappet piece attached to the shaft, and the spring 11,

together with the pressure in chamber *a*, forces the valve to its seat.

*Q. What part has valve 9 performed during the operations just described?*

A. Spring 10 (Fig. 65), together with the pressure in chamber $b^2$, forces valve 9 to its seat and it thus prevents the escape of air to the atmosphere.

*Q. Explain the passage of the air when the brake valve handle 4 is placed in release position.*

A. Valve 9 is forced from its seat and air from the brake cylinder comes back through the double check valves (Fig. 62), enters at *X* (Fig. 65) into chamber $b^2$, passes by the unseated valve 9 into chamber *c*, thence to the atmosphere at *Y*, and thus releases the air from the brake cylinders.

*Q. If the brake valve handle is left in application position how much pressure will be obtained in the brake cylinder?*

A. The reducing valve between the main reservoir and brake valve is adjusted to close when the pressure between the reducing valve and brake valve is 45 pounds, hence this is the maximum pressure that can be obtained in the brake cylinders when using the straight-air brake.

*Q In what position should the brake valve handle be carried when the brake is not in use?*

A. Release position; so placed any slight leakage of main reservoir pressure by the seat of valve 8 (Fig. 64) can not creep on the brakes, since the air would escape direct to the atmosphere by the unseated valve 9.

*Q. In piping this valve how may mistakes be avoided?*

A. By examining the raised letters cast on the ou[t]

side of the lugs into which the pipes are screwed. M. R. indicates main reservoir; EX., the exhaust, and T. P., the trainpipe connection, or the one through which air reaches the brake cylinders after passing through the double check valves.

PECULIARITIES AND CARE OF THE STRAIGHT-AIR BRAKE VALVE.

*Q. What are the only parts in the Straight-Air Brake Valve that get out of order?*

A. The rubber seats of valves 8 and 9, and the shaft washer, 6.

*Q. How may the check valves 8 and 9 be removed?*

A. By removing caps 12 and 13 the valves will fall out.

*Q. Are valves 8 and 9 interchangeable?*

A. Yes.

*Q. What effect would be produced by a leak across the seat of valve 8?*

A. With the brake valve in release position a constant blow would exist at the exhaust. When the brake was applied this leak would continue to apply the brakes harder.

*Q. What effect would be produced by a leak across the seat of valve 9?*

A. After the brake was applied and the brake valve handle placed on lap the leak would gradually release the brake.

*Q. What effect would be produced if gasket 6 (Fig. 67) formed a poor joint?*

A. The bad effect of this would only be noticed

during such time as the brake was applied, when air in chamber *b*, connected through port $b^1$ and $b^2$ with the pipe leading to the double check valves and brake cylinders, would pass by gasket 6 and escape to the atmosphere, causing a blow at the exhaust and at the handle end of the shaft, tending to release the brake.

*Q. To remove the shaft 2 for the purpose of cleaning, or for renewing gasket 6, what should first be done?*

A. First remove valves 8 and 9 to avoid bending the stems of these valves which, as shown in Fig. 67, extend within the circumference of the shaft 2. Next, remove the handle 4 and cap 14, and the shaft can be lifted out.

*Q. In cleaning the valve what special care should be taken?*

A. Not to put any oil on valves 8 and 9, or where it can work down upon the seats.

## DUPLEX MAIN RESERVOIR REGULATION

### AS USED WITH STANDARD WESTINGHOUSE EQUIPMENT ON ENGINES HAULING FREIGHT TRAINS.

*Q What is the special object to be obtained with the equipment shown in Figs. 69, 70 and 71?*

A. To provide a means by which a high main reservoir pressure can be obtained with which to release the brakes and recharge, without its being necessary for the pump to operate against this high pressure except during only such time as the brakes are applied.

*Q. Of what does the duplex governor consist?*

A. Of two pressure heads which operate in conjunction with one steam portion of the governor.

*Q. At what pressures is it customary to adjust the pressure heads?*

A. The low pressure head is adjusted to stop the pump when a main reservoir pressure of 85 pounds has been obtained, and the high pressure head is adjusted at 110 pounds.

*Q. If the brake valve handle is in full release or running position, how much pressure will there be in the main reservoir when the pump is stopped; if in any of the other positions what pressure results?*

A. 85 pounds main reservoir pressure is obtained when the brake valve is in release or running positions; in the other positions 110 pounds is obtained.

*Q. What objection is there to the use of one pump governor adjusted to shut off steam from the pump when a main reservoir pressure of 110 pounds is obtained?*

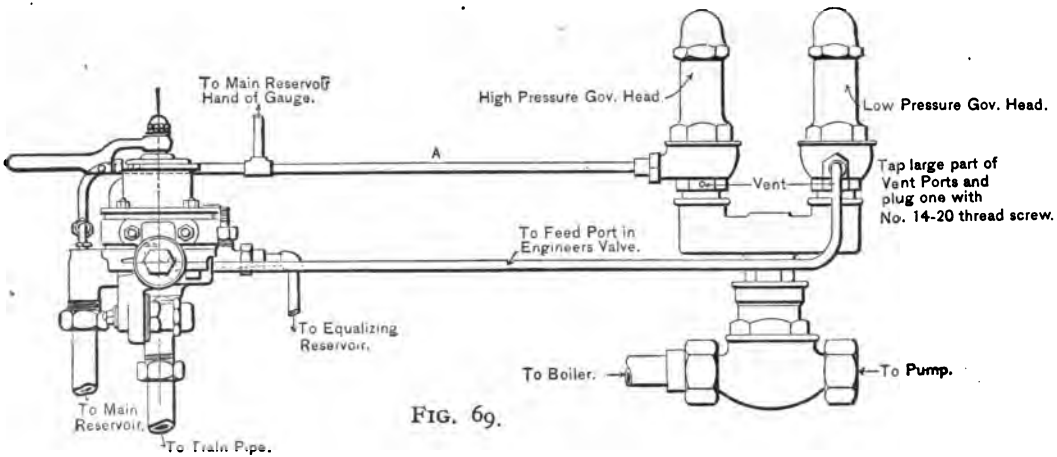


FIG. 69.

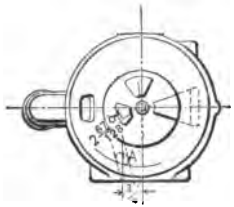

FIG. 70.

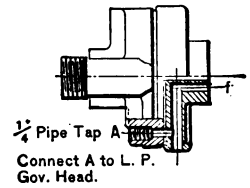


FIG. 71.

DUPLEX MAIN RESERVOIR REGULATION.

A. A pump operating against a high pressure continuously will wear faster and is much more likely to become overheated in freight service.

*Q. Explain why the pump is stopped when the main reservoir pressure is 85 pounds, if the brake valve handle is in release or running position.*

A. As indicated on Fig. 69, the pipe leading to the low pressure head is also connected at the brake valve to a hole drilled into the port, which, in running position, conveys air to the feed valve. This port contains main reservoir pressure, with the brake valve in this position, and as soon as main reservoir pressure reaches that for which the low pressure head is adjusted, usually 85 pounds, the pump is stopped.

*Q. Why is a higher main reservoir pressure obtained with the brake valve in other than release and running positions?*

A. When the brake valve handle is moved toward service position, the port supplying main reservoir pressure to the feed valve is closed, and the air which escapes at the governor vent port causes the pump to start. It will not cease operations unless the valve handle is again moved to running or release position, until sufficient pressure has been accumulated in the main reservoir to operate the high pressure head, usually adjusted for 110 pounds. Air from the main reservoir enters the brake valve as indicated and passes through pipe *A* to the high pressure governor head.

*Q. Are all brake valves drilled so that the pipe from the low pressure head can be connected into the port leading to the feed valve?*

A. All are that have been put in service recently. Figs. 70 and 71 indicate the proper location for this hole in case it is desirable to use the duplex governor in connection with the standard equipment.

## APPLIANCES AND METHODS OF TESTING TRIPLE VALVES IN ROAD SERVICE AFTER CLEANING, OR AFTER REPAIRING.

The necessity for properly testing triple valves after they have been subjected to cleaning and oiling can not be emphasized too strongly.

The Westinghouse Air Brake Company has designed proper paraphernalia, by means of which triple valves are subjected to tests which insure the proper action of valves when in service.

The following is taken from the pamphlet issued by the Westinghouse Air Brake Company on the subject of Triple Valve Testing:

After careful and thorough consideration, we have decided that, to produce satisfactory results, the triple valve should receive one of three distinct tests, according to whether it is in actual service, has just been cleaned, or has just been repaired.

It would be manifestly unreasonable to expect a triple valve that had been in service for a period of time to pass as rigid a test as one just repaired, and *vice versa.* It would also be manifestly improper to condemn a valve, in service, to the shop without first giving it a proper cleaning and re-test. It would be expensive, as well as unnecessary, to make this test as rigid as that to which newly repaired work is subjected; hence, practical conditions can best be met by three tests, one of which we will designate as a "Yard Test;" the second, a "Cleaners' Test;" and the third, a "Shop" or "Repair Test."

While plain triple valves cannot be tested on the

apparatus shown, suitable pipe connections for testing same can readily be made; these are not shown, since the particular arrangement most suitable can best be

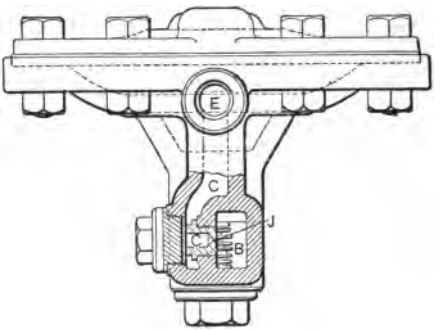


FIG. 72.—CONTROLLING VALVE.

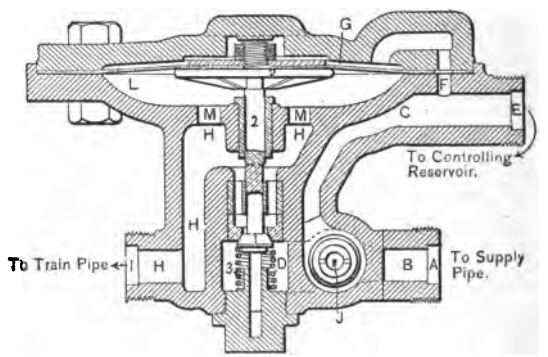


FIG. 73.—CONTROLLING VALVE.

determined when conditions under which the work is to be done are known.

Each test requires special devices, and we have aimed

to employ standard apparatus as far as possible in the designs.

The special valve for use in connection with the different tests is shown in Figs. 72 and 73. It is so designed that, regardless of the length of the train, or amount of leakage, the rise of trainpipe pressure is always at a predetermined number of pounds per minute. This rise corresponds to the conditions existing at the end of a long air train when a release is made, if the usual main reservoir pressure and a main reservoir of recommended capacity be employed.

### OPERATION OF DEVICE.

As air from the yard plant or engine enters the valve at *A* (Fig. 73), it is free to pass through port *B* into chamber *D*. Trainpipe pressure can always be maintained in chamber *L* under diaphragm 2 by means of ports *H* and *M*. Air in port *B* is free to pass through small pin hole *J*, thence through port *C*, and out at E to the controlling reservoir. Owing to the unchanging volume of the controlling reservoir, a constant predetermined rise of pressure is obtained, and this pressure is always free to reach chamber *G*. When the pressure in this chamber is greater than that in chamber *L*, connected with the trainpipe through ports *M* and *H*, diaphragm 2 is forced downward, thus unseating valve 1 and establishing a direct connection from the supply pipe to the trainpipe through *A*, *B*, *D*, *H*, and *I*. With a long train, valve 1 is forced farther from its seat, thus permitting a faster feed, while with one car the valve is barely off its seat; hence, regardless of the length of train, or the amount of leakage, this valve will cause a rise in trainpipe pressure of a predetermined number of pounds per minute, which feed is governed by the size of the controlling reservoir and of port *J*.

### YARD TEST.

The device illustrated in Figs. 74 and 75 is for use in

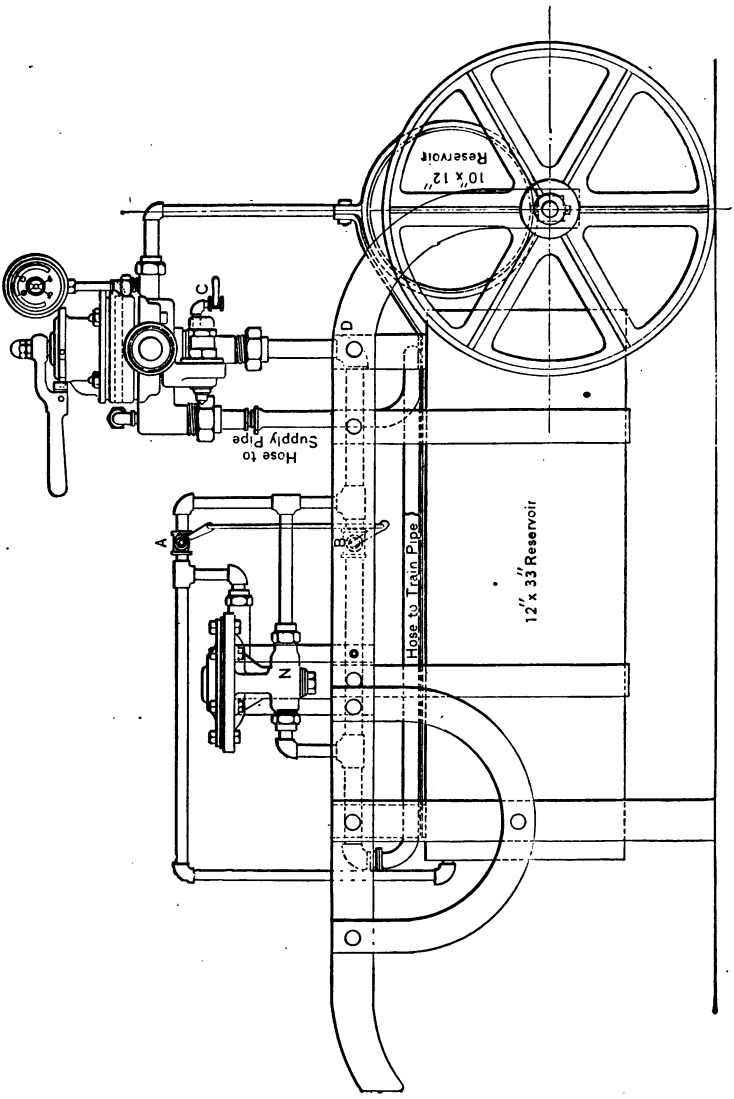


FIG. 74.—PORTABLE YARD TESTING PLANT.

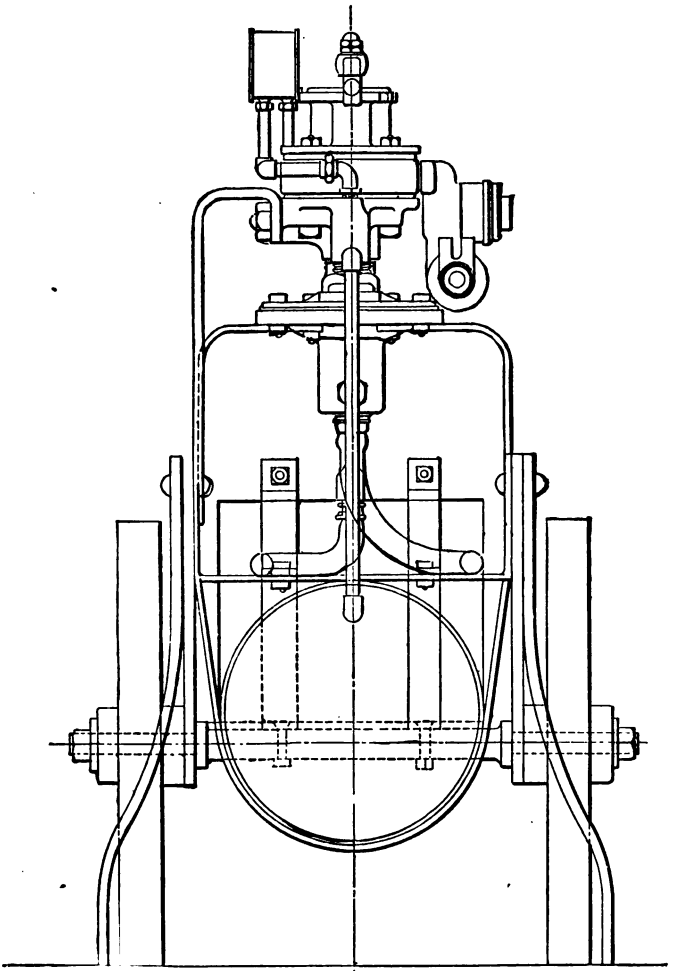

FIG. 75.—PORTABLE YARD TESTING PLANT.

connection with a yard testing plant. It may also be used between the tender and first car of a train when an engine is to be used for testing same. The object of this apparatus is to condemn from road service to the cleaners any valve which will not release a brake when the rise in trainpipe pressure corresponds with that at the end of a long air train: controlling valve *N* accomplishes this result.

If this device is always to be used in connection with an engine for testing trains, the brake valve and equalizing reservoir are unnecessary. In the event of the brake valve not being used, the supply pipe should be joined to the test apparatus at point *D*.

*Test.*—If to be used with a yard testing plant, connect hose as indicated and turn cocks *A* and *B* as shown. Cock *C* should always remain open when the yard test plant is being u ed. The air now feeds through the brake valve, and the usual tests to locate leakage, faulty piston travel, triple valve, etc., should be made. When this has been completed and the train is fully charged to 70 pounds, make a service reduction of 10 pounds; then turn cocks *A* and *B* to their closed position and release. Any triple valve which fails to release the brake when the trainpipe pressure has reached 70 pounds should be removed, sent to the cleaners, and be replaced by a triple that has been cleaned.

If an engine is used to test brakes, the supply pipe of the testing device should be coupled to the trainpipe or the tender and the other hose to the car. In this case cock *C* should remain closed throughout the test and the brake valve handle be left in full release position; otherwise the manipulation of the cocks is the same as just described in connection with a yard testing plant.

To avoid the escape of air, when the brake valve handle is in full release position, the warning port in the rotary valve should be plugged.

If always to be used between a tender and train and

never with a yard testing plant, omit the brake valve and equalizing reservoir and pipe as already explained. The manipulation of the cocks is the same as with the yard testing plant. The disposal of any triple valve failing to release when the trainpipe pressure has reached 70 pounds should be as already explained.

In making the release test from an engine, the engineer should keep the trainpipe pressure as near 80 pounds as possible by leaving the brake valve handle in full release position as much as is necessary to accomplish this result.

### CLEANERS' TEST.

The apparatus shown in Plate XI must be used only as a condemning test for valves that have been cleaned, and never as a shop test for repaired triple valves.

This rack has been designed to test either the "Freight" triple valve (F-36), the "Passenger" (F-27), or the "Pullman" (F-29). It will be noted that provision has also been made for testing hose, angle cocks, stop cocks, couplings, release valves and retaining valves.

After cleaning the triple, examining springs to see that they have not received a permanent set, the gaskets to see that they are in good condition, and the different parts to see that they are in proper condition to be returned to service, the triple-piston packing ring, slide valve, and the bush in which the piston operates should be carefully lubricated with a few drops of high-grade mineral oil.

It should then be placed on the rack and subjected to the following tests:

No. 1, Feed-groove test.

No. 2, Release test.

No. 3, For tightness of slide valve, emergency and check valves, and for any leakage by gaskets.

*Test No. 1.*—Many valves will apply brakes properly

when given sufficient time to charge the auxiliary reservoir; but in hill service, where the reservoirs must be recharged quickly and uniformly between brake applications, the auxiliary is not properly recharged during the limited available time. This trouble is usually due to a partially closed feed groove in the triple, and to guard against the possibility of such an occurrence, this port in each triple should be tested on the rack after cleaning, or on the shop rack after receiving repairs.

Unless specially directed otherwise, permit cock *H* to remain open; this is done to maintain equal pressure above and below the rubber diaphragm in controlling valve *N*. With unequal pressures it might be ruptured.

With all cocks except *H* closed, open cock *B*, and with a trainpipe pressure of 80 pounds the triple valve should charge reservoir *M* from 0 to 70 pounds, as follows:

An F-36, G-24 or B-25 triple in from 60 to 85 seconds.
An F-27 or F-24 " " 28 to 45 "
An F-25, F-29 or F-46 " " 16 to 25 "

*Test No. 2.*—With all cocks open except *A*, *E*, and *F*, charge reservoir *M* to 70 pounds; then close cock *B*, and by means of cock *A* reduce the trainpipe pressure to 60 pounds, at which time cock *A* should be gradually closed; next close cock *H* and open cock *E*, and the triple valve should release the air from brake cylinder *O* by the time the trainpipe pressure has reached 70 pounds; failing to do this, the valve should be sent to the shop for a new triple-piston packing ring, and any other needed repairs.

*Test No. 3.*—With cocks *A*, *C*, and *E* closed, the triple can be operated by alternately opening and closing cocks *B* and *F*. The exhaust port of the triple should be coated with soapsuds to determine if any leakage exists when the slide valve is in its different positions. If satisfactory up to this point, close cock *B*, open cock

*F*, and remove the union at the triple; coat the opening with soapsuds to determine if there is any back leakage by the check valve or gaskets.

If the valve passes these three tests satisfactorily, it is all right to put back in service; failing, it should receive the necessary repairs.

### SHOP REPAIRS AND TEST.

After receiving the necessary shop repairs, the triple valve should undergo a thorough test upon the rack shown in Plate XII. This rack is the same as shown in Plate XI, with the addition of the weighted valve *K*, cocks *G* and *L*, and screw *I*. On it may be tested the "Freight," "Passenger" or "Pullman" triple valves.

The purpose of the weighted valve is to maintain a certain difference in pressure between that in the trainpipe and in the auxiliary reservoir. If the triple valve is sufficiently sensitive, its piston and slide valve will be forced to release position without the weighted valve being lifted, when the pressure in the trainpipe is slowly increased.

The weight to be used with each valve should never be other than as indicated on the weights themselves.

A triple valve leaving the shop should receive the following tests aside from the general examination to condemn the graduating spring, emergency-valve rubber seat, check-valve spring, gaskets, strainer, etc.:

Test No. 1, Examination of fit of packing ring.

Test No. 2, For packing-ring leakage.

Test No. 3, Feed-groove test.

Test No. 4, For release.

Test No. 5, For tightness of slide, emergency and check valves, and general freedom from leaks of castings or gaskets.

*Test No. 1.*—The triple-piston packing ring must be examined and known to be fitted so that the ends come neatly together when in the cylinder, and at the same

time be perfectly free when revolved in its groove. Entire freedom from dirt, and the lubrication of only the triple-piston packing ring, the bush in which it works, and the slide valve, with a small amount of high-grade oil, are important.

*Test No. 2.*—With all cocks closed excepting *F* and *H*, turn screw *I* to its extreme inward position; then close cock *F* and open cock *B* very slowly to avoid forcing the triple piston back with sufficient force to bend its stem when it strikes screw *I*, which screw is supposed to hold the triple piston midway between the service and graduating positions. The maintenance of 80 pounds pressure in the trainpipe should not result in leakage by the piston sufficient to give more than 15 pounds pressure in reservoir *M* in one minute. When this test is completed, close cock *B*, open cock *F*, bleed the air from reservoir *M*, and turn screw *I* to its outer position.

*Test No. 3.*—With the triple piston in release position, no air in the auxiliary reservoir, and 80 pounds in the trainpipe, the auxiliary should charge from 0 to 70 pounds, using an F-36 triple, in from 60 to 85 seconds; an F-27, in from 28 to 45 seconds, and an F-29, in from 16 to 25 seconds.

To make test, close all cocks excepting *F* and *H*; opening cock *F* will exhaust all air from the trainpipe side of the triple piston; then close cock *F*, open cock *B*, and note the number of seconds necessary to charge reservoir *M* to 70 pounds. When fully charged, coat the exhaust port with soapsuds to be sure that no leakage exists when the slide valve is in release position.

*Test No. 4.*—With all cocks open excepting *E*, *A* and *F* (Plate XII), permit reservoir *M* to be charged to a pressure of 70 pounds; next close cock *B*, and, by means of cock *A*, slowly reduce the pressure, as shown by the trainpipe gauge hand, until it registers 60 pounds, at

which time cock *A* should be gradually closed; coat the exhaust port with soapsuds to be sure the slide valve is tight in service position; now close cock *H*, and open cock *E;* under the conditions now existing the triple valve should release the air from brake cylinder *O* without valve *K* being lifted from its seat; if this valve should be forced from its seat, the movement denotes that the triple valve is not sufficiently sensitive, and the defect should be remedied. The rise in trainpipe pressure is retarded by controlling valve *N*, and any valve passing this test will be sure to release properly if placed at the end of a long air train.

*Test No. 5.*—The tightness of the slide valve in emergency position and the general freedom of the triple from leaks through castings or gaskets should be determined by painting the exhaust port and the triple with soapsuds when all cocks except *F* are closed. Passing these tests, the union should be uncoupled and the trainpipe connection of the triple covered with soapsuds to detect any back leakage by the emergency check valve or gaskets.

## LUBRICANTS.

*Q. What lubricants should be used in the different brake apparatus?*

A. Steam Cylinder of Pump—Valve Oil.

Air Cylinder of Pump—Valve Oil.

Brake Valve—High-grade Machine Oil.

Triple Valve and High-speed Reducing Valve—High-grade Mineral Oil.

Brake Cylinder—A light grease that will not flow in Summer or become thick in Winter.

## AIR-BRAKE RECORDING GAGES.

*Q. What is an air-brake recording gage?*

A. It is a mechanism by means of which lines are traced upon a chart. An examination of these lines will tell exactly how the brakes have been manipulated by the engineer.

*Q. What causes the lines to be traced upon the chart?*

A. The contrivance has an arm containing a pen which is raised or lowered as the pressure fluctuates in the place to which the gage is piped. As the pen and chart move, a line is traced showing the variation of the pressure.

*Q. What causes the chart to move?*

A. It is connected with a clock movement, by the adjustment of which the movement of the chart is controlled.

*Q. To what else is the recording gage similar?*

A. To a steam indicator; but in that case steam instead of air causes the pen to rise or lower as the pressure changes, and the movement of the main steam piston imparts a movement to the indicator drum upon which paper is fastened, and upon which a line is traced by a pen or pencil.

*Q. To what part of the air-brake system is the recording gage piped?*

A. It may be piped to the train line, the auxiliary reservoir, or the brake cylinder. On a passenger train

the gage is usually placed at the rear of the train, while on a freight train it is placed in the caboose.

*Q. Which of these places is preferred?*

A. The train line. So connected, the chart shows the fluctuation of pressure when the brakes are applied and released, and the exact habits of the engineer are shown.

*Q. How many forms of recording gages are there?*

A. Two; a revolving gage, the chart of which is shown in Fig. 82, and a horizontal gage, a chart from which is shown in Fig. 83.

*Q. From the record made by a recording gage, what may be ascertained?*

A. The amount of train line pressure carried; the correctness of the air gage; the method employed by the engineer in the application and release of the brakes; the position of the brake valve handle in releasing brakes and recharging the train; it is a valuable adjunct in finding the cause of air brake wrecks or "failures"; shows if the air brake instruction of the road is lived up to; shows how long it takes to recharge with the different main reservoirs and pumps on the different engines; it is a valuable aid in discovering the cause of slid flat wheels; it increases the interest of the engineers in air brake matters, as their record and skill are shown by the lines on the chart; besides these things, a great deal of kindred information may be gleaned by a careful study of the charts.

*Q. At what speed do these charts usually move?*

A. From two and one-quarter to four and one-half inches an hour, as desired. Horizontal charts have been used at as high a speed as three feet an hour. The speed can be adjusted by means of the clock.

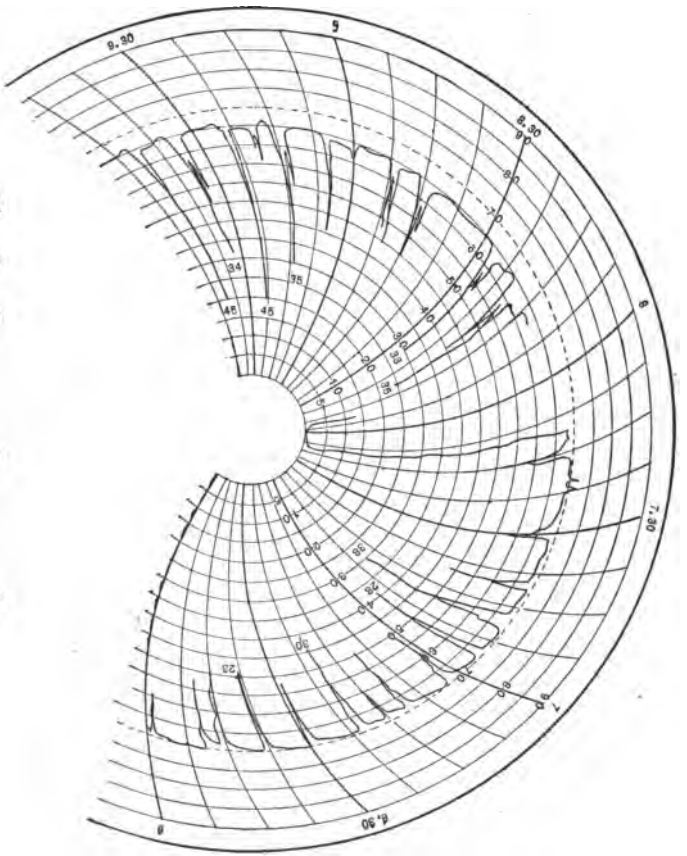


FIG. 82.—REVOLVING RECORDING GAGE.

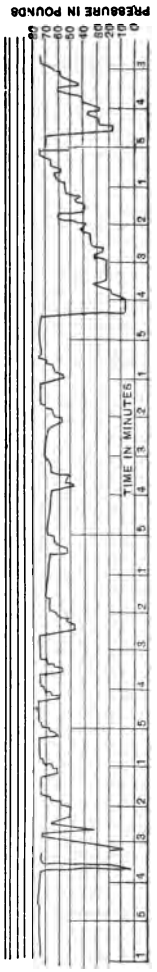


FIG. 83.—HORIZONTAL RECORDING GAGE.

*Q. Is there any advantage gained from a slow or fast movement of the paper?*

A. A slow movement condenses the record and does not require so large a chart, while a fast movement uses a longer chart, but shows a greater corresponding amount of detail. If a slow movement is used, and the detail is desired at any particular point, such as a water crane or milk depot, the speed of the paper may be adjusted as desired.

In Fig. 82, the broken line shows the path the pen would trace if there was a constant pressure of 70 pounds. No pressure is represented by the circumference of the small circle.

The figures at the top are a time reference, and the figures up and down refer to the amount of pressure.

The distance between the lines running up and down represent the distance traveled by the train. The chart (Fig. 82) shows two records on the same run made by two different men. A study of the two shows several points of interest.

The best work shows on the card to the right; the card at the left shows that the train line governor was not adjusted properly for a 70 pound train line pressure, or else the gage was wrong; the card at the right shows three station stops where the engineer made more than a 20 pound train line reduction, while the card at the left shows the same thing at six stations, and at almost every station the

stop was made by two applications of the brake. The amount of reduction points very strongly to the use of the emergency.

Fig. 83 shows a record taken from a horizontal recording gage.

The horizontal lines represent pressure as indicated, and the length of the paper shows the distance.

The card shows that a train line pressure of 72 pounds was used, and that the engineer was in the habit of making too heavy train line reductions.

In one place the train line pressure was reduced to 18 pounds, another to 15, another to 8 pounds, and in one case all air was taken from the train line. The two cases of heavy reduction at the left of the record point strongly to the use of the emergency position of the brake valve.

In two places at the right the card shows that in two places the engineer released to recharge, but evidently did not calculate properly, as both times he started to apply the brakes when the train line was only charged to 60 pounds. The pressure in the auxiliaries was undoubtedly even somewhat less than this.

## TRAIN INSPECTION.

*Q. Why is train inspection necessary?*

A. To find and remedy, before trying to handle the train on a grade, any defects that would render its handling unsafe; part of the pistons may be out against the cylinder heads when the brakes are applied, the retaining valves may be poor, some brakes may not apply, auxiliaries may not charge, leaks may exist, the brakes may go into emergency when trying to make a service application, and many other defects may exist.

*Q. Where should we begin to get a train ready?*

A. At the rear.

*Q. Is it wrong to start at the head end?*

A. It would not be were the cocks not opened between the tender and cars. If the cocks were opened, the air would blow through and out of a chance open cock, and a loss of time and air would result.

*Q. Commencing at the rear, what should be done first?*

A. The rear angle cock must be closed and the hose hung up.

*Q. What harm is there in allowing the hose to drag?*

A. It collects dirt and cinders, which are blown into the train and help to close strainers, and which work into the triples and cause them to wear faster. In winter, ice getting into the hose may block it.

*Q. What should we do as we go towards the engine?*

A. See that the retainer handles are turned down, hand brakes released, hose coupled, and cocks turned so that the cars are cut in.

*Q. How does the cock in the cross-over pipe, connecting the train line to the triple, usually stand when the car is cut in?*

A. At right angles to the pipe. See Plate I.

*Q. How should the angle cocks stand at the end of the car when cut in?*

A. Parallel with the pipe.

*Q. Do the angle cocks and cut-out cocks always stand as just described?*

A. No; sometimes in just the reverse positions.

*Q. Why is this?*

A. These are cocks used with very old equipment and may be readily recognized, as they differ in shape from those now employed. If in doubt, look at the crease in the top of the plug, which always stands parallel to the opening in the valve.

*Q. What should we always do before coupling the hose between the engine and cars?*

A. Blow out the train line on the engine to get rid of dirt and water.

*Q. After coupling the hose and turning the angle cocks, are we ready to look over the brakes?*

A. No, not until the pump has charged the train.

*Q. With a constant pressure of seventy pounds on the train line, how long should it take to charge one auxiliary from zero to seventy pounds with the modern equipment?*

A. About seventy seconds.

*Q. How long does it take to charge a train of twenty cars?*

A. This depends on the condition of the pump and the leaks in the train. If the capacity of the pump were sufficient to keep a constant train-line pressure of seventy pounds, twenty cars could be charged as quickly as one. This cannot be done, as twenty feed grooves take air from the train line faster than the pump will supply it.

*Q. Who should tell when it is time for the test?*

A. The engineer. He should wait until full pressure is obtained and then make a twenty-pound service reduction.

*Q. What should then be done?*

A. One brakeman should go over the train turning up the retainer handles, while the other examines piston travel and looks for leaks.

*Q. What should the piston travel be?*

A. If no rule exists on your road in regard to this, a piston travel between 5 and 8 inches will be found to give good satisfaction on ordinary grades.

*Q. What should be done after the retainer handles are raised and the piston travel adjusted?*

A. The engineer should be signaled to release, and then there should be a wait of fifteen or twenty seconds, to allow the brake-cylinder pressure to reduce to what the retainer holds.

*Q. What should then be done?*

A. The man on deck should turn down the retainer handles. If a blow issues from the retainer when the handle is turned down, the retainer is working properly.

A strict count of those working should be kept. The man on the ground should walk along and see that the brakes release when the retainer handles are turned down.

*Q. What should be done after the inspection is completed?*

A. A report should be made to the engineer and conductor, giving them a knowledge of the piston travel, the number of retainers in working order, the number of cars, the number of air cars in working order, and any general information concerning the condition of the train.

*Q. In testing, would it do for a brakeman to open the angle cock at the rear of the train to set the brakes?*

A. This is decidedly a poor practice; brakes that cannot be worked from an engine will sometimes work by opening an angle cock. If a hose lining were loose, a brakeman might apply the brakes and an engineer release them all right, while, in making the reduction from the engine, the train-line reduction going ahead might roll up the lining and close the hose. We want to know just how the brakes will work from the engine.

*Q. If there is a leak in the hose couplings, what should be done?*

A. Turn angle cocks, break the coupling, and, if the seat is bad and there is no extra hose gasket, make the seats round, if they are not so, and recouple. If the leak still exists, break the coupling, put a small stick back of each lug, and close the couplings on them.

*Q. Why should paper never be used to make a joint?*

A. It works into strainers, often causing an auxil-

iary to charge slowly, and it may prohibit getting quick action on this car.

*Q. When inspecting a train, if we find a brake that does not apply with the rest, what should be done?*

A. See that the car is cut in properly, and try the bleed cock to see that there is air in the auxiliary. If the auxiliary is charged, signal the engineer for a train-line reduction.

*Q. If the brake applies and then leaks off gradually, without any air coming out of the triple exhaust, what is probably the trouble?*

A. The air is blowing by the packing leather in the brake cylinder.

*Q. How can a brake that does not apply when the reduction is made be sometimes made to work?*

A. By cutting it off from the car ahead and the one behind it and opening the angle cock. The cylinder may be dirty, and setting the brake in the emergency may loosen the dirt and cause it to work properly.

*Q. If the auxiliary were found to contain no air when the bleed cock was opened, what might be the trouble?*

A. The feed grooves might be corroded shut in the triple; the strainer where the cross-over pipe joins the main train line, or the one where the cross-over pipe joins the triple, may be filled with dirt and scale.

*Q. Is it good practice to pour oil into a hose to make a brake work?*

A. Decidedly not; it may occasionally furnish temporary relief, but it will decay the rubber-seated valve and dampen the strainers, pipe, and triples so that dirt will adhere to them and render them sticky.

*Q. Is a small leak, one that the pump will easily overcome, more easily managed in a long or a short train?*

A. In a long train.

*Q. Why?*

A. Because there is a much larger volume of air in a long train line, and the reduction causing the brakes to leak on harder after being applied will be much slower on a long than on a short train. Frequently a leak that could not be gotten along with in a train of three or four cars, if cut in with twenty tight cars, would not be noticed.

*Q. If a retainer were broken off and the pipe plugged, what would result?*

A. After the engineer applied the brake, he could not release it, as the exhaust port would have been closed.

*Q. Would it interfere with applying the brake?*

A. No.

*Q. If a brake sticks, what should be done?*

A. Look to see that no retainer handle is up, that the hand brake is not set, and that no lever is caught. Then signal the engineer again to release. If he is unable to release it, cut the car out and bleed it.

*Q. Should a car be bled when cut out?*

A. Always ; a leakage of train-line pressure between the cut-out cock and the triple might cause the brake to apply after it was cut out, if any air were left in the auxiliary.

*Q. If the piston stays out on a car after we hear the air escape from the triple exhaust port, what is wrong?*

A. The release spring is weak probably.

*Q. Is it necessary to cut such a brake out?*

A. No; the jar of the wheels against the shoes will force the piston in.

*Q. If two hose couplings are frozen together, how should they be separated?*

A. The ice should be thawed, or the gaskets will be torn.

*Q. If a triple fails to work because it is frozen, what should be done?*

A. It should be thawed and the drain plug removed in the bottom of the triple, to remove the water and avoid a repetition of the trouble.

*Q. What three things would cause the brakes to go into emergency when making a gradual train-line reduction?*

A. A weak graduating spring, a broken graduating pin, and, by far the most likely, a sticky triple.

*Q. How would we find the triple causing the trouble?*

A. On a train of five or six cars we can watch to see which brake grabs first and cut the car out. On a train of over seven cars, the brakes do not usually apply with the first reduction on the car causing the trouble, so, to find the faulty triple, have the engineer make a five-pound train-line reduction, find the car with the brake not set and cut it out. Then try again with all cut in to be sure that the faulty triple has been found.

*Q. How would we find the faulty triple if the brakes went into quick action with the first reduction on a long train?*

A. Turn an angle cock in the middle of the train and see which half contains the trouble; continue in this

manner until the trouble is located in a five car lot; have the brakes applied and watch these five to see which brake goes into quick action first, and cut out the defective triple.

*Q. If the emergency has been used, or we find a car cut out, and, when we cut it in, a strong heavy blow issues from the triple exhaust and at the same time the brake sets on the car and cannot be released, what is the trouble?*

A. The emergency piston is stuck down, holding the emergency valve from its seat.

*Q. How can we close it?*

A. Tap the triple lightly. If this does not work, turn the cut-out cock in cross-over pipe until the blow stops and then cut it in suddenly; the sudden flow of air up under the emergency piston may raise it.

*Q. In trying the brakes on a passenger train, how should the signal be given?*

A. From the head car to apply them and from the rear car to release them, to be sure that the whistle-line cocks stand right through the train. On an excursion train the signal should be tested from every car in the train.

*Q. Explain a means by which poor brakes can be detected.*

A. By feeling of the wheels at the foot of a grade.

*Q. What will characterize the wheels on the cars having the poor brakes?*

A. They will be cold, or cooler at least, than the others.

*Q. What is this test called?*

A. The thermal test.

*Q. Would we expect to find the same degree of heat in all the wheels?*

A. No, the heavier cars will have the greater braking power as compared with the light weights, and these cars would naturally have warmer wheels. This test, nevertheless, is a very valuable aid in detecting poor brakes.

*Q. How would you account for it if a test was made at the top of a grade and all the brakes applied, but some of the wheels were found to be cold when making the thermal test at the foot of the grade?*

A. One of four chief causes is generally responsible for this condition—low braking power, poor packing leathers, poor retainers, or triple feed grooves in a dirty condition.

*Q. What could dirty feed grooves have to do with the cool wheels if the reservoirs charged all right and the brakes applied properly at the top of the grade?*

A. In the usual yard test air enough will leak by the triple-piston packing ring and charge the reservoir so that the brakes will apply properly even if the feed groove is dirty. In descending a heavy grade there are but a few seconds in which to recharge between brake applications; as a result the reservoirs on the cars are never recharged after the first application that is made on the grade, and the brakes on these cars are, as developed by the thermal test, practically useless, although they did pass the first test.

## TRAIN HANDLING.

*Q. What should we always do before coupling to a train?*

A. Start the pump and be sure that everything is working properly. Do not wait to discover pump or engineer's valve defects when your train is in and ready to proceed.

*Q. How should an engineer handle the brake on his engine in coupling to a train?*

A. In backing onto a train, especially an empty one, he should make two or three applications of his driver and tender brakes, and leave his valve on lap when coupling to the train.

*Q. Why is this done?*

A. To couple to the train with reduced auxiliary pressures.

When the cocks between the engine and tender are turned, in coupling a train to an engine, the brakes are usually applied on the engine and tender on account of the reduction caused by the air flowing back into the train. If the train line is long and empty, the main reservoir pressure might flow back and equalize with that in the train line at so low a pressure that it might not be able to overcome the tank and driver auxiliary pressures so as to force these triples to release position. In this case the two brakes would be stuck, and if more cars were to be picked up, we would have to wait to pump up, or get down and bleed these two brakes off. If we had backed onto the train with reduced auxiliary

pressures on the engine and tender, we would not have met with this trouble, as the main reservoir pressure could then have raised that in the train line sufficiently high to have released the brakes.

*Q. What should be done after getting our cars placed in the train?*

A. We should wait until everything is fully charged.

*Q. How can we tell when the train is charged?*

A. The pump will about stop; or place the valve on lap, and if everything is charged the black hand will not fall.

*Q. What should then be done?*

A. A thorough test of piston travel, leaks, and retaining valves should be made before attempting to handle the train on grades.

*Q. How much reduction should be made?*

A. A gradual twenty-pound reduction.

*Q. Why is it necessary to make a test?*

A. A part of the pistons may be traveling against the cylinder heads, the travel may be too short, the retainers may not be good, or there may be something wrong with a triple that would throw the whole train into emergency when the service application was desired, in which case freight might be shifted or broken, especially in a train partly equipped with air brakes.

*Q. In testing brakes, from what point should they always be applied and released?*

A. From the engine.

*Q. How could it happen that a brakeman could turn an angle cock at the rear of the train and apply the brakes, and an engineer could release them, but that the engineer could not set them from the engine?*

A. The lining of a hose might be loose, so that the engineer could throw air back into the train to release the brakes, but when a reduction was made, the air flowing in the opposite direction might roll the lining up and close the hose.

*Q. Is this a common occurrence?*

A. No, but it is by no means unheard of.

*Q. What else should always be tested?*

A. The train line, to see if it leaks, and how much.

*Q. How should this be done?*

A. By making a seven-pound reduction in service position and then placing the valve on lap. Watch the black hand, and the fall of it will show the leak on the train line.

*Q. Will not a leak on the train line show if the valve is simply lapped without first applying the brakes?*

A. It will in time, but not nearly so quickly as by the other way.

*Q. Why not?*

A. If the valve is simply lapped, the brakes are not applied, the triples are in release position, and the feed grooves connect the auxiliaries and train line. If there is a leak in the train line with the triples in release position, the air from the auxiliaries will leak through the triple feed grooves back into the train line, and not only the train-line but the auxiliary pressures will have to be reduced before the black hand on the gauge will register the leak.

*Q. Why is the other way quicker?*

A. If the brakes are first applied and the valve then placed on lap, the feed grooves in the triples between the auxiliaries and train line have been closed and the leak

simply has to reduce the train-line pressure when the black hand will register the leak. With a large volume of air a given leak will reduce the pressure much more slowly than the same leak drawing air from a smaller volume.

*Q. Just as soon as a train tips over the summit of a hill, what should be done?*

A. A reduction of train-line pressure should be made to be sure that no angle cocks have been turned and that the brakes take hold properly, also to get the use of the retainers as soon as possible.

*Q. How can we tell if the angle cocks back of the tank are properly turned?*

A. By the sound of the train-line exhaust. The more cars of air the greater the volume of air on the train line, and the longer the equalizing piston will have to stay up to make a given reduction.

*Q. What should be done if the brakes do not hold properly, or we know by the train-line exhaust that an angle cock has been closed?*

A. Blow brakes before the train gets to moving fast.

*Q. How much reduction should be made for the first?*

A. Not less than five pounds, and after we get over fifteen cars it is better to make a seven-pound reduction.

*Q. In a part air train, what would be the harm in starting with a ten-pound reduction?*

A. The brakes setting hard on the air-brake cars would cause the slack on the non-air cars to run up hard, causing a jar that would be likely to damage the car or the contents, to say nothing of the effect on the crew in the caboose.

*Q. Why is a light reduction liable not to set the brakes, especially on a long train?*

A. Because, with a large volume of train-line pressure, reductions are made so slowly that there is a tendency for auxiliary pressure to feed through the triple feed grooves into and equalize with that in the train line, in which case the triple pistons would not move; or, if they did, the air going from the auxiliary into the brake cylinder very slowly would blow through the leakage grooves past the pistons and out to the atmosphere.

*Q. How much should be made for the second reduction?*

A. This is governed largely by circumstances, but the best results with long trains will be gotten if no very light reductions are made. If the reduction is being made on a long train and the packing rings of some of the triples are a little loose, there is a tendency on the part of the auxiliary pressure, that should go to the brake cylinders, to leak back into the train line by the packing ring.

*Q. We continue our train-line reductions until finally our brakes are full set, that is, all the auxiliary and brake-cylinder pressures have equalized. How much reduction is usually necessary to accomplish this, if the piston travel is not over 8 inches?*

A. About twenty pounds, if it is made with one reduction; but in handling a train on a grade, if we needed to get all we could, it would be permissible to make a twenty-five-pound reduction.

*Q. Give the reason for this last statement.*

A. In descending a grade, we may have gone two, three, or four miles, while we have been making a twenty-pound reduction. Naturally, some of the air put into the brake cylinders has escaped by the packing leathers

to the atmosphere in going this distance, and making another train-line reduction will let more auxiliary pressure to the cylinders. Where the twenty-pound reduction was made with one reduction, the air had no time to leak away by the cylinder packing leathers.

*Q. Suppose we had already made a twenty-five-pound reduction and the packing leathers in the brake cylinders were practically tight, if we continued taking air from the train line, would the brakes be set any harder?*

A. No.

*Q. Would we lose any braking power?*

A. Yes.

*Q. How would we lose braking power?*

A. The brake is already full set, that is, the auxiliary and brake-cylinder pressures are equal; with a further reduction of train-line pressure, no more auxiliary pressure can go to the cylinder; but just as soon as the auxiliary pressure is enough greater than that in the train line to overcome the resistance of the graduating spring in the triple, the triple piston will be forced to emergency position, and we will have a direct connection between the auxiliary and brake cylinder through the emergency port in the end of the slide valve. The train-line pressure being less than that in the auxiliary and cylinder, both these pressures will begin leaking by the packing ring of the triple piston into the train line.

*Q. Is there any other way in which we would lose braking power by too heavy a train-line reduction?*

A. Yes; the train-line check in the emergency part of the triple is seldom air-tight, owing to corrosion. When the train-line pressure is less than that in the brake cylinder, the brake-cylinder pressure forces the

rubber-seated valve from its seat and leaks by the train-line check into the train line.

*Q. Is there usually any warning to let the engineer know he has made too heavy a reduction?*

A. Yes; especially on a long train, where there are more packing rings to leak.

*Q. What is it?*

A. Under these circumstances the equalizing piston is likely to rise of its own accord, causing a blow at the train-line exhaust.

*Q. What causes the piston to rise?*

A. The engineer reduced the little drum pressure in order to cause the equalizing piston to rise and reduce the train-line pressure. It seated when the train line was a trifle less than the little drum pressure. When too heavy a train-line reduction had been made, we saw that the auxiliary and brake-cylinder pressures fed back into the train line. The train line now being greater than the little drum pressure, the equalizing piston is forced from its seat, and the blow at the train-line exhaust continues as long as air is feeding into the train line from the auxiliaries and brake cylinders.

*Q. Does the equalizing piston always rise and give this warning?*

A. No; if the packing ring in the equalizing piston is too loose, the air feeds by and equalizes the little drum and train-line pressures, but the braking power is lost just the same.

*Q. Is the triple piston supposed to form a joint on the leather gasket between the triple head and the main body of the triple?*

A. Yes, when the gasket is new, but the gasket dries out so that the surface is not smooth.

*Q. What places should we pick out, if possible in which to recharge?*

A. Where the grade lets up a little and on curves where a train binds.

*Q. To release brakes, where should the handle of the engineer's valve be placed?*

A. In full release position.

*Q. How long should it be left here?*

A. This is governed entirely by the length of the train. If, in descending a grade, both hands on the gauge show that the train-line and main reservoir pressures equalize below seventy pounds, the valve should be left in this position until both hands start to go above seventy. If the pressures equalize above seventy pounds when the valve is thrown to full release and stay there, the valve should be moved to running position as soon as the brakes are released, so as not to overcharge the auxiliaries.

*Q. Why, on a long train, should the valve be left in full release position until both hands start above seventy pounds?*

A. A large port connects the main reservoir and train line in this position and a small one in running position, and we get the benefit of the excess pressure from the main reservoir in recharging; the pump works faster, and we can charge the train much more quickly, because the train-line pressure being higher forces air into the auxiliaries faster.

Brakes are likely to stick and wheels slide, especially on a long train, if we try to release brakes in running position.

*Q. Why does the pump work faster?*

A. Because there is less main reservoir pressure for it to work against.

*Q. Why do the last three or four pounds feed more slowly into the train line, if the valve is put in running position?*

A. Because when, in running position, the train-line pressure is almost up to that at which the train-line governor is adjusted, the spring in the governor begins to be compressed and allow the little feed valve to partly close, in which case the pump will compress air faster than it can get through the train-line governor. When the main reservoir is charged to ninety pounds, the pump practically stops, and this is likely to happen before the auxiliaries are fully recharged.

*Q. Why will some brakes stick in trying to release them in running position?*

A. Because the train-line pressure rising slowly may feed by some triple piston-packing rings, and allow auxiliary pressure to keep equal with that in the train line.

*Q. Why will the wheels slide in this case?*

A. Because the brake on this car has been left full set and the auxiliary fully recharged. A five-pound reduction will probably set this brake in full with a pressure of sixty-five pounds, and this is more than is safe, especially with a light car. If a brake once sticks it is very likely to remain so, as the auxiliary and brake-cylinder pressures equalize so high that it requires a higher train-line pressure to release this brake, and the train-line pressure increasing slowly, gives the air a better chance to leak by the triple packing ring. A brake acting this way may be all right if handled properly.

*Q. In descending a grade after getting the use of the retainer and having everything recharged, why is a five-pound reduction much more effectual than a five-pound reduction made without the use of the retainer?*

A. Because in one case we are putting five pounds from the auxiliary into fifteen pounds in the cylinder, and in the other we are putting five pounds from the auxiliary into an empty cylinder, and a part of that put in blows through the leakage groove before the piston travels far enough to close it.

*Q. If a twenty-pound train-line reduction will apply a brake in full without the use of the retainer, how much reduction ought to set the brake in full after getting its use?*

A. Not over fifteen pounds.

*Q. If all retainers are being used, is it necessary after charging up to make a five or seven pound for our first reduction?*

A. Yes, some of the retainers might have been out of order, so as not to hold any air in the cylinder, and less than a five-pound reduction would not catch these brakes again.

*Q. What should an engineer do, if, when he is not using the brakes, he feels them applying so as perceptibly to diminish the speed of the train?*

A. He should place the handle of the engineer's valve on lap.

*Q. Why?*

A. Probably a hose has burst, or the conductor is using the conductor's valve. If the valve is not lapped, the main reservoir pressure will be lost, and there will be no pressure with which to release the brakes and recharge the auxiliaries.

*Q. Which is less hurtful, a leak that will gradually slow a train up, or one that will simply keep the train running steadily?*

A. A leak that will slow a train up is much to be preferred.

*Q. Why?*

A. If the leak simply runs the train steadily and the engineer allows the pressure to gradually leak away because he seems to be making a nice, smooth run, he would have a hard time stopping the train if necessity demanded it, after the pressure had leaked down to fifty pounds.

*Q. Should an engineer try to make as smooth a run with air as can be done with hand brakes?*

A. As a rule, no, although on some light grades a few retainers will run them smoothly. On heavy grades and long trains it is necessary to slow up to recharge.

*Q. What should always be done, where possible, in making train-line reductions?*

A. Watch the gauge.

*Q. How do you account for the fact that sometimes, after a seven-pound reduction of little drum pressure is made and the valve lapped, the gauge records only a five-pound reduction when the train-line exhaust closes?*

A. The packing ring in the equalizing piston is loose, and train-line pressure has fed by it into the little drum.

*Q. Is this more likely to happen on a long or a short train?*

A. On a long train.

*Q. Why?*

A. As there is a greater volume of air on the train line of a long train, it takes longer to reduce the pressure, and the train-line pressure has a longer time to leak in the manner described.

*Q. If a quick reduction is made in emergency with the engine alone, and the valve is then placed on lap, why is the tank or driver brake likely to kick off after a few seconds, although they would stay set in service application?*

A. In emergency position, air is drawn direct from the train line without taking any from the little drum. When the valve is placed on lap, the little drum pressure leaks by the packing ring of the equalizing piston, raises the train-line pressure, and kicks off one or both brakes.

*Q. Why will this happen on an engine and not on a train?*

A. The volume of air on the train line of an engine alone is very small, and a slight leak into it is sufficient to raise the train-line pressure and release the brake. With a train, the train-line volume is so large that the leakage into it from the little drum is not sufficient to affect the triples.

*Q. The release of the brakes on the engine alone, after the use of the emergency, is ascribed by some to the surge of air. Is this the cause?*

A. No; a surge of air would release the brake almost instantly. The brake does not release sometimes until five or ten seconds have passed.

*Q. Why will this happen on one engine and not on another?*

A. This simply means that on one the triple piston-packing rings are looser than that in the equalizing piston, and the train-line pressure feeds by the triple piston and equalizes with that in the auxiliaries.

*Q. The above usually happens when stopping an*

*engine at a water-crane or on a turntable. How are these stops best made with the air?*

A. One application is best to use with an engine alone. If we find that we are stopping three or four feet short, open the throttle, and the engine can be helped along a short distance and a smoother stop be made.

*Q. What happens every time you use the emergency on a turntable?*

A. You strike the table a blow equal to the weight of your engine multiplied by the speed at which you are moving, and then, if the turntable breaks down, wonder why the company does not provide a decent table.

*Q. In making a water-tank stop with a passenger train, how should it be done to avoid a jar to the train and passengers?*

A. The stop should be made with two applications of the brake, except the grade is too steep and the pressure too low for safety.

*Q. How do we handle the valve to make the first release so that the brakes will respond with the first reduction?*

A. When the speed of the train has been reduced to about three miles an hour, throw the valve handle to full release and bring it back on lap immediately.

*Q. Why bring it back on lap?*

A. So as not to raise the train-line pressure too high. The feed grooves in the triples are small, and have only three or four seconds in which to equalize the train-line and auxiliary pressures. If the valve is left in full release or running position, and the train-line pressure gets to seventy pounds, and there is, say, only fifty-five pounds in the auxiliaries, the triple pistons will not move to service position until over a fifteen-pound reduction of train-line pressure has been made. By the time we have made this amount of reduction in service position we

have gone by the water-crane, unless we use the emergency, and that is what is usually done if the engineer is not up to date.

*Q. When should brakes be released on a passenger train?*

A. Just before the train stops.

*Q. What should be done on a grade just heavy enough so that the train will start with the brakes released?*

A. Stop the same as at a water-crane. No jar will be felt with a light application.

*Q. How about a heavy grade?*

A. Our stop will then depend on the grade and our pressure. Safety should be of first importance, even if the stop is a trifle rough.

*Q. What makes the jar, if the brakes are not released before the train stops?*

A. With the brakes set hard, the trucks are distorted, and it is the struggle of the trucks to right themselves that causes the jar.

*Q. Can brakes be released longer before stopping after a light or a heavy reduction?*

A. After a heavy reduction, as there is more air in the cylinders to be gotten rid of, and the brakes release more slowly.

*Q. What is meant by an application?*

A. It covers all the time from the moment the brake is applied until it is released; three or four reductions may be made during one application.

*Q. In making a stop with a freight train, when should brakes be released?*

A. After the train comes to a full stop, to avoid

breaking the train in two if the slack runs out hard in releasing before stopping.

*Q. If we have stopped short with a freight train, and need to release before stopping to pull up farther, what should be done?*

A. We should wait for the slack to adjust itself in the train before using steam. Even then the steam should be used very cautiously.

*Q. In running passenger trains over cross-overs to get around freights, what care should be taken?*

A. To do this, brakes have to be used when flagged, at the upper cross-over, lower cross-over, and usually at a station. We should charge up as much as possible after each application. Do not follow the plan of releasing and putting the valve on lap in such a case, to be sure the triples will respond quickly. They will respond quickly, but if the station stop is on a grade, you may not have air enough left to make it when you get there.

*Q. What is the usual cause of trains running away?*

A. Making a great many reductions without occasionally charging up, or allowing the pressure to leak away, because the train is running steady, and then when we get ready to recharge, not having enough air left to slow up the train.

*Q. On a fast passenger run, how may time be saved in using the brake?*

A. By waiting longer before applying the brakes and then making a ten-pound reduction at the start.

*Q. Will this not jar the passengers?*

A. Not when going fast. Passenger trains are continuous, and there is very little slack to run up. A ten-

pound reduction made with a train moving ten miles an hour would produce a very unpleasant sensation to passengers, where at forty miles an hour it would not be noticed. This is explained in the subject HIGH-SPEED BRAKE.

*Q. Should brakes be tested in taking on cars?*

A. Yes, to be sure that the brakes on these cars work properly, and that the brakes back of them can be applied and released through them.

*Q. When all retainers on a train are not necessary, how should they be used?*

A. At the head end if the grade is short; otherwise change them around and use them on every other car, so as not to overheat any wheels.

*Q. If the brakes are applied and the engineer wishes to release and drift two or three hundred feet before stopping, what should be done?*

A. Enough retainers should be put in operation to keep the slack bunched.

*Q. When should hand brakes be used?*

A. On the rear of a part air train when backing it into a siding, or, if it stands on a knoll, to keep the slack from running back.

*Q. Should hand brakes and air brakes be used together on the same car?*

A. This is a risky practice. If the two brakes work together, we are very likely to slide wheels, and if they work in opposition, there is danger of a brakeman being thrown from the car, and the hand brake being applied will take up the slack in the brake rigging, so that the piston cannot get by the leakage groove.

*Q. If hand brakes be used back of the air, if*

*there are not enough air brakes to control the train, what is likely to happen?*

A. This is likely to produce a bad effect when the air brakes are released. If the retainers are poor and allow the slack to run out, the train may be broken in two.

*Q. If hand brakes are to be used with the air, where should they be applied?*

A. Next to the air.

*Q. Should driver brakes be cut in when descending a heavy grade?*

A. Always, or so much more work is thrown on the car brakes. The use of a water brake would, of course, be an exception to this rule.

*Q. If an air-brake train should be stalled on a grade, should part of the train be left with air brakes to hold them until the engine comes back?*

A. No; the air brakes should be released one at a time, and the hand brakes applied. If left with the air holding them, the air might leak off and allow the train to run away.

*Q. When brakes are full set, the long travel brakes are easier to release. They may be released and leave the short travel brakes applied. Is this good practice in holding trains?*

A. No; it is very bad practice. A train may be broken in two in this way.

*Q. If brakes stick and will not release by placing the valve in full release, what should be done?*

A. Make a full service reduction and then, with a full excess pressure, throw to full release. If a release from the engine is possible, this will accomplish it.

*Q. What harm is there in pulling hose apart instead of uncoupling them?*

A. The couplings are likely to be sprung so that they cannot be coupled again, and the train line is likely to be torn from the car or engine.

*Q. Does it do any harm to lean on the rotary handle when the brakes are applied?*

A. Yes; if the dovetail piece that fits into the rotary is tight on account of dirt and gum, the rotary may be cocked so as to allow main reservoir pressure to feed into the train line under the rotary and release some of the brakes.

*Q. What is the trouble, when there is a leak on the train line, if the engine is alone, but coupled to tight cars, the leak does not show?*

A. The leak is in the angle cock at the rear of the tender. When coupled to a train, the leak is not noticed as the cock is open. With the engine alone the cock leaking allows air to pass out of the hose to the atmosphere.

*Q. In double heading, which engine should handle the brakes?*

A. The lead engine.

*Q. What should the second engineer do?*

A. Turn the cut-out cock under his valve, and under no circumstance, unless told to, should he cut in and interfere with the work of the lead engine.

*Q. If the pusher engine has no cut-out cock, what should be done?*

A. The valve should be placed on lap.

*Q. In this case, why does the equalizing piston sometimes rise?*

A. Because the lead engineer increases train-line pressure to release the brakes, and the pressure underneath the equalizing piston is greater than that above it.

*Q. How may it be seated?*

A. By putting the handle in full release position long enough to charge the little drum and seat the piston.

*Q. In case of emergency, when it is necessary for us to leave the engine, what should be done?*

A. Throw the engineer's valve to full emergency position and leave it there. In our hurry, if we tried to lap the valve, we might get it into running position and release the brakes.

*Q. Why ought we never to bring our valve back from emergency position too quickly?*

A. There might be two or three cars cut out, a couple of plain triples, a contracted passage, or a couple of cars that would not go into quick action on account of dirty strainers. If these cars were together, they would not help to carry the quick action back. Generally a quick-action triple will not send a quick reduction through five cars which are cut out. In this case, if the engineer's valve had been lapped too quickly, the surge of air ahead from the rear end would release the head brakes, and all we would have would be a very light service reduction on the cars back of those cut out. If we leave the engineer's valve in emergency position long enough, we could at least get the full service application on these cars, and the emergency on those ahead of the cars cut out.

*Q Should the engine be reversed when the driver brakes are applied, if we wish to stop quickly?*

A. No; the following test, made by Mr. Thomas, Assistant General Manager of the N. C. and St. L.,

clearly demonstrates that the air brake used alone is better than the brakes with the reverse lever, or than the reverse lever alone.

The result of these tests was published in the '95 *Air-Brake Proceedings*, and is given on pages 264 and 265.

The conditions of the test were as follows:

Driving brake power, seventy per cent.; tender, one hundred per cent.; N. C. & St. L. coaches, ninety per cent.; Pullman sleeper, forty to one hundred and one per cent.

Boyer speed recorder was used and tests were made: first, brakes applied; second, engine reversed; third, sand lever opened. Track was level, in best possible condition, and all circumstances favorable.

From the record of tests the following valuable information was derived:

First. Best stops are made with braking power not quite strong enough to skid wheels.

Second. Length of stop is the same in reversing the engine whether cylinder cocks are open or closed.

Third. The wheels did not lock rigidly when the engine was reversed without the brakes being used.

Fourth. The tests demonstrated that the brakes used alone are better than with the engine being reversed. The stop is quicker, and there are no flat spots obtained.

Fifth. Enough sand is much better than too much.

Sixth. Sand should be used before wheels start skidding, as its use will not start the wheels revolving when once skidding; it will simply increase the flat spots.

Seventh. Sand being used on a straight track, the drivers did not lock when the engine was reversed, but on a curve they would. On a curve the engine rocks, and sand is not so likely to strike the rail.

Eighth. In expected emergencies, the drivers did not lock when sand was used before brakes were applied and engine reversed, but it took so long to get the sand

running first that, in the end, the stop was not made as quickly as with unexpected emergencies where the engine was not reversed.

Ninth. The unexpected emergencies are the ones that bear the most weight, as expected emergencies are practically unheard of.

The table on page 266 will be of interest, as it shows how quickly air-brake trains can be stopped when fitted with the Westinghouse quick-action brake.

The train consisted of fifty Pennsylvania 60,000 capacity box cars whose light weight was 30,000 pounds each.

# TABLE.

| No. | Brakes Used. | Condition of Train. | Speed. | Sand. | Total No. of Stops Made. | Maximum Length of Stops. | Minimum Length of Stops. | Average Stop in Feet. | Time in Secs. | Wheels Slid. | Flat Spots. |
|---|---|---|---|---|---|---|---|---|---|---|---|
| 1 | Driver and tender brakes..... | Engine and tender.... .... .. .. | 30 | No. | 9 | 280 | 240 | 254 | 11 | No. | No. |
| 2 | Driver brake alone..... ..... | " " ..... | 30 | " | 2 | 438 | 387 | 412 | 18 | " | " |
| 3 | Tender " " .... ..... | " " ..... | 30 | " | 7 | 604 | 458 | 538 | 23 | " | " |
| 4 | No brakes, engine reversed..... | " " ..... | 30 | " | 3 | 464 | 426 | 450 | 20 | Locked and revolved backwards. | " |
| 5 | Driver and tender brakes and engine reversed..... ... | " " ..... ..... | 30 | " | 4 | 290 | 245 | 276 | 12 | Yes. | 2½ in. |
| 6 | No brakes and engine "plugged" | " " ..... | 30 | " | 2 | 540 | 505 | 522 | 25 | Locked and revolved backwards. | No. |
| 7 | Driver and tender brakes..... | " " .... .... ..... | 30 | Abundance | 1 | 260 | 260 | 260 | 11 | No. | " |
| 8 | No brakes and engine reversed.. | " " ..... ... | 30 | " | 1 | 280 | 280 | 280 | 12 | " | " |
| 9 | " " " " "plugged." | " " ..... | 30 | " | 1 | 265 | 265 | 265 | 11 | " | " |
| 10 | Driver and tender brakes and engine reversed..... ..... | " " ..... | 30 | No fresh sand. | 4 | 177 | 140 | 158 | 9 | " | " |
| 11 | Driver and tender brakes, with engine "plugged." ..... | " " ..... . . | 30 | " | 1 | 177 | 177 | 177 | 9 | " | " |
| 12 | Driver and tender brakes ..... | " " ..... ..... | 20 | No. | 1 | 111 | 111 | 111 | 8 | " | " |
| 13 | No brakes and engine reversed.. | " " ..... ..... | 20 | " | 1 | 161 | 161 | 161 | 9 | " | " |
| 14 | Driver and tender brakes.. ..... | " " ..... . | 20 | Yes. | 1 | 90 | 90 | 90 | 6 | " | " |
| 15 | " " " " ..... | " " ..... ..... | 40 | No. | 1 | 532 | 532 | 532 | 25 | " | " |
| 16 | No brakes, engine reversed..... | " " ..... | 40 | " | 2 | 861 | 820 | 840 | 32 | Locked and revolved backwards. | " |

# TABLE.—Continued.

| No. | Brakes Used. | Condition of Train. | Speed. | Sand. | Total No. of Stops Made. | Maximum Length of Stops. | Minimum Length of Stops. | Average Stop in Feet. | Time in Secs. | Wheels Slid. | Flat Spots. |
|---|---|---|---|---|---|---|---|---|---|---|---|
| 17 | Driver and tender brakes... ..... | Engine and tender..... | 40 | Yes. | 1 | 475 | 475 | 475 | 20 | No. | No. |
| 18 | All brakes cut in..... | Engine, tender and 5 N. C. & St. Louis coaches ..... | 30 | No. | 8 | 271 | 260 | 258 | 11 | " | " |
| 19 | " " " " ..... | Engine, tender and 5 N. C. & St. Louis coaches ..... | 30 | Yes. | 1 | 250 | 250 | 250 | 11 | " | " |
| 20 | " " " " engine reversed. | Engine, tender and 5 N. C. & St. Louis coaches ..... | 30 | " | 7 | 335 | 199 | 265 | 11 | Yes. | 3 in. |
| 21 | " " " " ..... | Engine, tender and 5 N. C. & St. Louis coaches..... | 40 | No. | 4 | 500 | 400 | 474 | 19 | No. | No. |
| 22 | " " " " ..... | Engine, tender and 5 N. C. & St Louis coaches..... | 40 | Abundance | 1 | 475 | 475 | 475 | 19 | " | " |
| 23 | " " " " engine reversed. | Engine, tender and 5 N. C. & St. Louis coaches ..... | 40 | Yes. | 1 | 542 | 542 | 542 | 23 | Yes. | 4 in. |
| 24 | " " " " ..... ..... | Engine, tender, 5 N. C. & St. L. coaches and 4 Pullmans.. | 30 | No. | 1 | 327 | 327 | 327 | 14 | No. | No. |
| 25 | " " " " ..... | Engine, tender, 5 N. C & St. L. coaches and 4 Pullmans.. .... | 35 | " | 1 | 465 | 465 | 465 | 19 | " | " |
| 26 | " " " " ..... | Engine, tender, 5 N. C. & St. L. coaches and 4 Pullmans..... | 40 | " | 2 | 575 | 575 | 575 | 25 | " | " |
| 27 | " " " " ..... ..... | Engine, tender & 4 Pullman sleepers | 30 | " | 1 | 367 | 367 | 367 | 14 | " | " |
| 28 | " " " " ..... | " " " " | 40 | " | 1 | 702 | 702 | 702 | 26 | " | " |
| 29 | * " " " " engine reversed. | Engine, tender and 5 N. C. coaches ..... ..... | 30 | Yes. | 9 | 375 | 218 | 350 | 13 | Yes. | 2¾ in. |
| 30 | † " " " " " " | Engine, tender and 5 N. C. coaches..... ..... | 30 | " | 1 | 325 | 325 | 325 | 13 | No. | No. |
| 31 | * " " " " " " | Engine, tender and 5 N. C. coaches..... | 30 | " | 1 | 375 | 375 | 375 | 14 | Yes. | 3 in. |
| 32 | Pullman sleeper "kicked." .... | | 30 | No. | 1 | 416 | 416 | 416 | 18 | No. | No. |
| 33 | N. C. and St. L. coach "kicked." | | 30 | " | 1 | 202 | 202 | 202 | 10 | " | " |

* Unexpected Emergencies.

† Expected Emergency.

# WESTINGHOUSE QUICK-ACTION AUTOMATIC BRAKE.

## SUMMARY OF RESULTS OF TESTS, WITH 50 CAR TRAIN, IN OCTOBER, NOVEMBER AND DECEMBER, 1887.

| PLACE OF TEST. | Down Grades. Feet per Mile. | FIRST. | | | SECOND. | | | FOURTH. | | | SIXTH. | | | SEVENTH. | | EIGHTH. | | | NINTH. | | | TENTH. | | |
|---|---|---|---|---|---|---|---|---|---|---|---|---|---|---|---|---|---|---|---|---|---|---|---|---|
| | | Miles speed. | Feet distance. | Sec'ds time. | Miles speed. | Feet distance. | Sec'ds time. | Miles speed. | Feet distance. | Seconds time. | Miles speed. | Feet distance. | Sec'ds time. | Miles speed. | Ft. distance apart. | Miles speed. | Ft. distance. | Sec'ds time. | Miles speed. | Ft. distance. | Sec'ds time. | Miles speed. | Feet distance. | Seconds time. |
| St. Paul | 13.6 | 19 | 172 | 7 | 36 | 490 | 15 | 20<br>37 | 200<br>583 | ..<br>.. | .. | .... | .. | 25 | 100 | 20 | 109 | .. | 37 | 327 | .. | .. | ..... | .. |
| Chicago | Level, head wind. | 22 | 184 | 10 | 37 | 480 | 15 | 20<br>34 | 162<br>470 | 11<br>15 | 19 | 1,200 | 62 | 20 | 59 | 20 | 120 | 6 | 33 | 272 | 11 | .. | ..... | .. |
| St. Louis | 52.8 | 20 | 176 | 11 | 36 | 507 | 18 | 35 | 502 | 17 | 21 | 2,115 | 128 | 23 | 61 | 20 | 109 | 6 | 38 | 377 | 11 | .. | ..... | .. |
| Cincinnati | 50.0 | 25 | 284 | 12 | 35 | 542 | 17 | 37 | 573 | 17 | 21 | 1,925 | 75 | 22 | 32 | 20 | 102 | 6 | 41 | 425 | 12 | .. | ..... | .. |
| Cleveland | 40.0 | 26 | 265 | 12 | 43 | 718 | 20 | 38 | 636 | 17 | 23 | 1,686 | 65 | 25 | 45 | 20 | 96 | 6 | 40 | 375 | 11 | 43 | 767 | 22* |
| Buffalo | 32.20 | 21 | 214 | 12 | 40 | 679 | 19 | 39 | 648 | 19 | 20 | 1,000 | 48 | .. | 59 | 20 | 93 | 6 | 40 | 414 | 13 | .. | ..... | .. |
| Albany | 35.0 | 20 | 158 | 10 | 36 | 560 | 18 | 37 | 580 | 19 | 20 | 1,342 | 60 | .. | 180 | 19 | 78 | 5 | 40 | 358 | 12 | .. | ..... | .. |
| Boston | 40.0 | 19 | 123 | 10 | 32 | 406 | 16 | 34 | 483 | 17 | 21 | 1,035 | 54 | 22 | 62 | 20 | 111 | 8 | .. | .. | .. | 38 | 319<br>547 | 12<br>17 |
| New York | 53.0 | 23 | 203 | 12 | 41 | 674 | 20 | 41 | 672 | 20 | 21 | 2,137 | 85 | .. | 43 | 22 | 91 | 6 | .. | .. | .. | 45 | 495<br>1,204 | 13<br>27 |
| Philadelphia | 44.0 | 23 | 264 | 14 | 36 | 593 | 19 | 36 | 579 | 18 | 18 | 1,889 | 75 | 22 | 35 | 20 | 87 | 6 | .. | .. | .. | 49 | 647<br>932 | 19<br>23 |
| Washington | 52.0 | 19 | 159 | 10 | 42 | 694 | 21 | 42 | 718 | 21 | 20 | 1,643 | 67 | 23 | 58 | 21 | 81 | 6 | 40 | 359 | 11 | .. | ..... | .. |
| Pittsburgh | 47.0 | 20 | 194 | 11 | 40 | 649 | 21 | 40 | 673 | 20 | 20 | 1,720 | 72 | .. | .. | 20 | 95 | 6 | .. | .. | .. | 45 | 494<br>890 | 14 |

* Passenger train only. Compare with freight train in Test No. 9.

**THIRD TEST.**—In all cases the brakes went fully on within two seconds.
**FIFTH TEST.**—The brakes were released in all cases in four seconds.

## DESCRIPTION OF TESTS.

1. Emergency stops, train running at *twenty miles per hour.

2. Emergency stops, train running at * forty miles per hour.

3. Applying brakes while train was standing still, to show rapidity of application.

4. Emergency stops, train running at * forty miles per hour.

5. Service stops and time of release. Exhibition of smoothness of ordinary stop and time of release.

6. Hand brake stops at * twenty miles per hour with five brakemen at their posts. At Buffalo there were seven brakemen.

7. Breaking train in two.

8. Emergency at * twenty miles per hour, the brake leverage having been increased to give the quickest stop possible. In the seven previous tests the usual safe braking power was used.

9. Emergency stop at * forty miles per hour, same leverage as test 8.

10. A train of twenty freight cars and a train of twelve ordinary passenger coaches, run along beside each other on parallel tracks, each being about the same weight and length of trains, and the brakes applied at the same time. This shows the relative stopping power of the old and the new brake.

* Speed attempted; actual speeds attained are given in statement and as read from speed gauge on engine. Fractions of miles and seconds are omitted. Two engines were used in making tests at St. Paul, and one in other tests.

## PIPING.

*Q. What should be done in preparing pipe for use?*

A. After bending the pipe it should be blown out with steam to get rid of scale and dirt. If there is no steam at hand, air should be used. Under no consideration should pipe be used without first being cleaned. All fins should be carefully removed to prevent their working loose and clogging strainers.

*Q. What should be done to the pipe while it is being blown out?*

A. It should be tapped lightly to loosen the scale.

*Q. What size pipe should be used in the different parts of the system?*

A. The sizes given in the air-brake catalogues are correct and should be strictly adhered to.

*Q. When using red lead on pipe, how should it be applied?*

A. Always on the outside of the thread to be screwed in, as in this way the red lead will not get inside the pipe.

*Q. In applying piping, what should be avoided?*

A. No sags should be allowed in which water might collect; where practicable, gentle bends should be substituted for elbows, and very short bends should be avoided.

*Q. Why are elbows or short bends undesirable?*

A. The friction caused by them retards the flow of air when a sudden reduction is desired in emergency.

*Q. Could pipe work be so crooked and elbows so numerous on an engine that a sufficiently quick reduction to cause emergency would not go through an engine?*

A. Yes; this has been found so on engines, but the trouble was remedied when the number of elbows and bends was reduced.

*Q. How should pipe work be secured?*

A. By clamps that will hold the pipe rigidly in place so as not to allow the pipes to be moved, holes to be chafed in them, or any vibration to exist.

*Q. After the pipe work is applied, what should be done?*

A. It should be thoroughly tested under full pressure, and the leaks detected by the use of soapsuds.

*Q. After the pipe is tested, what should be done?*

A. It should be painted with a rust-proof paint and one, if possible, that will not be affected by salt water dripping from refrigerator cars or by the acid in soft coal.

*Q. Why is larger pipe used on freight than on passenger cars?*

A. Because on a long freight train a sudden reduction will travel through the large pipe more quickly, as the larger the pipe the less the friction exerted to the passage of the air.

*Q. Is there any other reason?*

A. Yes; in emergency, with quick-action triples air from the train line is put into the brake cylinder; a freight car being shorter than a passenger car, the larger pipe makes the volume of air in the train pipe more nearly equal to that in the smaller pipe used on the longer passenger cars.

## CAM BRAKE.

The following simple rule to find the braking power developed by a cam brake is given by Mr. H. A. Wahlert.

Take two wires and place them between the brake shoe and the wheel; one at the top and one at the bottom of the shoe. Apply the brakes fully, and then measure the piston travel. Now release the brakes, recharge, and then apply fully again. Measure the piston travel again, and note how much more it has increased. Divide the additional travel had upon removing the wires by the thickness of the wire, and multiply this by the value of the cylinder. The result is the braking power on each brake shoe.

Four times this power is the total braking power developed on all four shoes.

### EXAMPLE.

Thickness of wires, $\frac{1}{8}$ inch.

Piston travel, with wires inserted according to rule, 3 inches.

Piston travel, with wires removed, $3\frac{1}{2}$ inches.

Value of 8-inch cylinder, 2500 pounds.

$3\frac{1}{2}$ inches $-$ 3 inches $= \frac{1}{2}$ inch.

$\frac{1}{2}$ inch $\div \frac{1}{8}$ inch $= 4$.

2500 pounds $\times$ 4 $=$ 10,000 pounds on each brake shoe.

10,000 pounds $\times$ 4 $=$ 40,000 pounds on all four brake shoes.

## BRAKING POWER AND LEVERAGE.

*Q. What is meant by braking power?*

A. The force applied by the shoes against the wheels to stop the motion of a car.

*Q. What is meant by the percentage of braking power?*

A. The total brake-shoe pressure as compared to the light weight of the car. The percentage is found by dividing the total braking power by the light weight of a car.

*Q. What per cent of the weight of a car is used as braking power on a freight car?*

A. Usually about seventy per cent or seven-tenths of the light weight of the car.

*Q. On a passenger car?*

A. Usually ninety per cent or nine-tenths of the light weight of the car, excepting with the high-speed brake.

*Q. Can these percentages be used if the car has two six-wheel trucks, and only two pairs of wheels on each car are braked?*

A. No; the percentages given refer to a certain per cent of the total weight on the rail of the braked wheels.

*Q. What per cent of braking power is used in designing driver brakes?*

A. Usually seventy-five per cent or three-fourths of the weight on the drivers when the engine is ready for the road.

*Q. What per cent of braking power is used on tenders?*

A. Usually one hundred per cent.

*Q. Why is a larger per cent of braking power used on tenders than on engines or cars?*

A. Because tenders are practically always loaded.

*Q. How were these percentages determined on as safe?*

A. By actual tests in the different kinds of service.

*Q. What brake-cylinder pressure is used in figuring the braking power with the different sizes of cylinders?*

A. Sixty pounds where using quick-action triples, and fifty pounds with the plain triples are figured as the cylinder pressure when the brakes are full set.

This does not refer to the quick-action triple as used with the reinforced brake.

*Q. How do we calculate the force acting on the push rod due to the pressure in the cylinder acting on the piston?*

A. Multiply the diameter of the piston by itself; the product by the decimal .7854, and this last product by the pressure in the brake cylinder.

*Q. What force would act on the push rod of an 8-inch cylinder using a quick-action triple?*

A. $8 \times 8 \times .7854 \times 60 = 3015$, usually figured as 3000 pounds.

*Q. With a plain triple?*

A. $8 \times 8 \times .7854 \times 50 = 2513$, usually figured as 2500 pounds.

*Q. Explain the difference in the percentage of braking power of a freight car light, and the same car when loaded to its full capacity.*

A. Seventy per cent of the light weight of a freight car is considered safe braking power.

If the light weight of a freight car is 25,000 pounds, it is given 17,500 pounds braking power. If the capacity of the car is 60,000 pounds, when loaded to its full capacity the total weight of the car and contents is 25,000 + 60,000, or 85,000 pounds, but we have only the brake-shoe pressure to stop the car loaded that is used when it is light. In emergency, we get about sixty pounds pressure in the brake cylinder and have seventy per cent braking power with a light car, but with the car loaded, when the brakes are set in emergency, the braking power is only twenty and one-half per cent of the total weight of this car.

In ordinary service application we obtain about fifty pounds pressure in the brake cylinder. This reduces the maximum braking power one-sixth, so that we use fifty-eight per cent braking power when the car is light, but when the car is loaded, the percentage of braking power to the total weight of the car and contents is only seventeen per cent.

*Q. How is the percentage of braking power of a passenger car affected by its load?*

A. Not very much, because ninety per cent of the light weight of the car is used as braking power, and when loaded, the additional weight is seldom as much as 10,000 pounds.

*Q. What forces are figured as acting at the push rod with the different sized cylinders, the cylinder pressure being figured at fifty pounds in service and*

*sixty in emergency with the quick-action triple, and fifty pounds with the plain triple in either service or emergency?*

A. Service application:

| 6 in. | 8 in. | 10 in. | 12 in. | 14 in. |
|---|---|---|---|---|
| 1400 | 2500 | 4000 | 5600 | 7700 |

Emergency application:

| | | | | |
|---|---|---|---|---|
| 1700 | 3000 | 4700 | 6800 | 9200 |

By using the following cuts and formulæ, the braking power on a car with any kind of leverage may be figured.

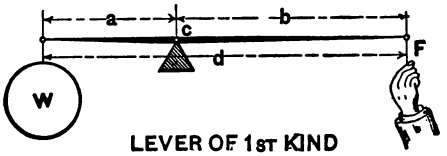


LEVER OF 1ST KIND

FIG. 84.

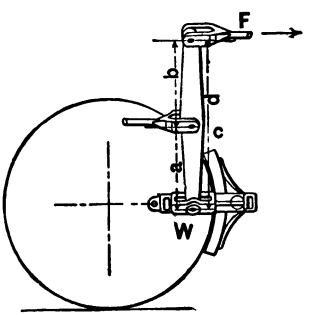


FORMULA

$$W = \frac{F \times b}{a} \qquad a = \frac{F \times b}{W}$$

$$F = \frac{W \times a}{b} \qquad b = \frac{W \times a}{F}$$

FIG. 85.—LEVER OF IST KIND.

There are three classes of levers:

I. When the fulcrum *c* (Figs. 84 and 85) is between the force *F* and the weight *W*.

II. When the weight *W* (Figs. 86 and 87) is between the force *F* and the fulcrum *c*.

III. When the force $F$ (Figs. 88 and 89) is between the weight $W$ and the fulcrum $c$.

Figs. 84 and 85 represent a lever of the first class.

*Q. What brake-shoe pressure W will result with a force F = 2000 pounds, b = 16 inches, a = 8 inches?*

A. $W = \frac{F \times b}{a}$ or $W = \frac{2000 \times 16}{8}$ or $W = 4000$ pounds.

The forces $W$ and $F$ act in the same direction on the levers, and the force at $c$ acts on the lever in an opposite direction from both and must be equal to their sum, or 6000 pounds.

*Q. What is the distance a if F = 2000, b = 16 inches, and W = 4000?*

A. $a = \frac{F \times b}{W}$; substituting values,

$a = \frac{2000 \times 16}{4000}$ or $a = 8$ inches.

*Q. What is the force F, when W = 4000, a = 8 inches, and b = 16 inches?*

A. $F = \frac{W \times a}{b}$; substituting values,

$F = \frac{4000 \times 8}{16}$ or $F = 2000$ pounds.

*Q. How do we find b if W = 4000 pounds, F = 2000 pounds, and a = 8 inches?*

A. $b = \frac{W \times a}{F}$; substituting values,

$b = \frac{4000 \times 8}{2000}$ or $b = 16$ inches.

Figs. 86 and 87 represent levers of the second class with the weight between the fulcrum $c$ and the force $F$.

Assume that $F = 2000$ pounds, a $= 8$ inches, $d =$ 16 inches, and $b = a + d$, or 24 inches.

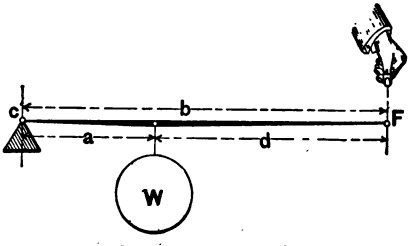


LEVER OF 2ND KIND
FIG. 86.

*Q. What is W?*

A. $W = \frac{F \times b}{a}$; substituting values,

$W = \frac{2000 \times 24}{8}$ or $W = 6000$ pounds.

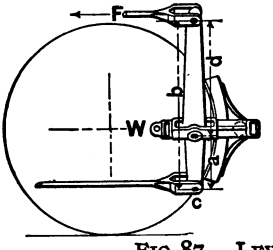


FORMULAE.

$W = \frac{F \times b}{a}$ $\quad a = \frac{F \times b}{W}$

$F = \frac{W \times a}{b}$ $\quad b = \frac{W \times a}{F}$

FIG. 87.—LEVER OF 2ND KIND.

In this class of levers we see that the forces $F$ and $W$ act in opposite directions on the lever, and the force exerted at $c$ will be equal to the difference between $F$ and $W$, or 4000 pounds.

We may compute values for $a$, $F$ or $b$, as was illustrated in the first class of levers, if we know the values of the other three.

Figs. 88 and 89 represent the third class of lever with the force $F$ exerted between the weight $W$ and the fulcrum $c$.

Assume that $F = 2000$ pounds, $b = 8$ inches, $d = 16$ inches, $a = b + d$, or 24.

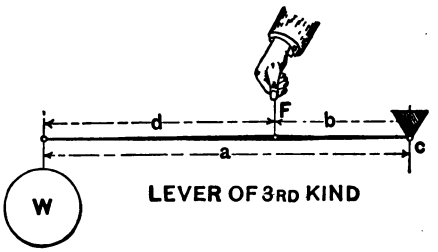


FIG. 88.

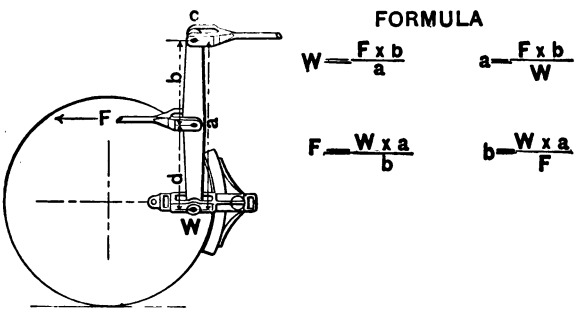


FIG. 89.—LEVER OF 3RD KIND.

*Q. What is W?*

A. $W = \dfrac{F \times b}{a}$; substituting values,

$W = \dfrac{2000 \times 8}{24}$ or $W = 666\frac{2}{3}$ pounds.

$W$ and $F$ act in opposite directions on the lever in this case, and the force exerted at the fulcrum $c$ will be equal to the difference between $F$ and $W$ or, in this case, $1333\frac{1}{3}$ pounds.

The other three formulæ may be used to find the value of *a*, *F*, or *b* when the other three values are known, as already shown.

Besides speaking of levers as first, second, and third class, they are known by their proportions as 1 to 1, 2 to 1, 2½ to 1, etc., according to the amount the force *F* is raised or diminished, due to the class and proportions of the levers employed.

To find the proportion of a lever of the first class, divide the distance of the fulcrum *c* to the force *F* by the distance from the fulcrum *c* to the weight *W;* or, referring to Fig. 84, it would be:

$b \div a$ or $16 \div 8 = 2$. This proportion of lever would be called a 2 to 1 lever.

The force *F* is multiplied by 2 at *W*.

In the second class, or Fig. 86, the proportion of the lever would be represented by: $b \div a$ or $24 \div 8 = 3$, or a 3 to 1 lever.

In the third class, or Fig. 88, the proportion of the lever would be represented by: $b \div a$ or $8 \div 24 = \frac{1}{3}$, or a $\frac{1}{3}$ to 1 lever, in which case the porportion and class of levers *reduces* the force 3 to 1 instead of increasing it.

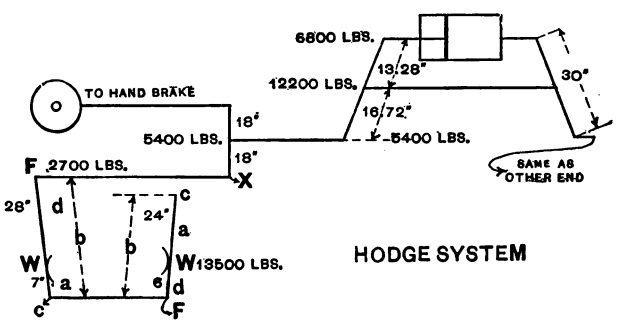


FIG. 90.

Having studied the classes of levers, we will now

make a practical application of their use in figuring the proportion of the levers to be applied to a car of given weight.

We wish to design a brake for a passenger car, the weight of which is 60,000 pounds, and use the Hodge system of levers as shown in the sketch.

Ninety per cent or nine-tenths of 60,000 pounds is 54,000 pounds. 54,000 pounds will be the safe braking power to apply to the wheels of a passenger car weighing 60,000 pounds.

54,000 ÷ 4 = 13,500, or the amount of braking power to be developed at each brake beam.

The length of the truck levers has to be determined from the truck construction. We will suppose the dimensions to be—long end, 28 inches; short end, 7 inches.

The truck levers are of the second class and substituting the values in the formula (Fig. 87).

$$F = \frac{W \times a}{b} \text{ or } F = \frac{13{,}500 \times 7}{35} \text{ or } F = 2700$$

That is, to get a power $W$ of 13,500 pounds against the brake beam, a force of 2700 pounds is necessary at the top of the live truck lever.

The forces $F$ and $W$ act on the live lever in opposite directions, so the force acting at fulcrum $c$ will be 13,500 — 2700 = 10,800. This power is transmitted to the bottom of the dead lever, which is of the same class as the live lever; but the force $F$ is applied at the bottom instead of the top of the lever.

We have from Fig. 87:

$$W = \frac{F \times b}{a} \text{ or } W = \frac{10{,}800 \times 30}{24} \text{ or } W = 13{,}500$$

So that, with a force of 2700 pounds acting at the top of the live lever of the dimensions given, a power $W$ of 13,500 pounds is developed at each truck, brake beam.

The dead truck lever need not be of the same length as the live lever, but the proportions between the holes must be the same in each.

The force of 2700 pounds that acts on the top of the live lever also acts at *X*, the end of the floating lever, and we must now determine what force must act on the rod that connects the end of the cylinder lever with the floating lever.

This rod is connected at the middle of the floating lever, and the power at this point must be sufficient to develop a force of 2700 pounds at each end of the floating lever.

The force exerted at the middle must be $2 \times 2700$ or 5400 pounds, as half of this amount is given to each end of the floating lever.

This 5400 pounds acting at the center of the floating lever must also act at the end of the cylinder lever, being connected directly with it.

What we now wish to determine is, with any desired length over all, how must the holes be spaced in the cylinder lever that the pressure acting on the push rod will produce a force of 5400 pounds at the outer end of the cylinder lever.

A 12-inch cylinder is recommended by the Westinghouse Company to be used with this weight of car. The brake set in emergency with a 12-inch cylinder gives us a push at the piston rod of 6800 pounds. We will suppose the distance between the outside holes of the cylinder lever to be 30 inches.

The following rule will enable us to locate the middle hole in the cylinder lever to which the tie rod is attached.

*Multiply the force acting at the piston by the length of the lever between the outside holes, and*

*divide the product by the sum of the forces acting at both ends of the cylinder lever. The result will be the distance from the middle hole of the cylinder lever to the hole to which the connection running to the floating lever is attached.*

Applying this rule to our problem we have

$$6800 \times 30 = 204{,}000$$
$$6800 + 5400 = 12{,}200$$
$$204{,}000 \div 12{,}200 = 16.72$$
$$30 - 16.72 = 13.28$$

The distance between the holes at the short end is 13.28 and the long end 16.72 inches, and, according to the rule, the long end is connected to the connection running to the floating lever.

The force exerted at the middle hole of the cylinder lever is also communicated to a hole similarly placed in the other cylinder lever, so that, using the same levers, we will obtain the same braking power on the wheels of the other truck.

In figuring the levers for the Stevens system of leverage, the power desired at the top of the live lever is figured the same as just explained.

When we know this force, we know that the same power has to exist at the outer end of the cylinder lever, as the Stevens system has no floating lever.

This we figure by the rule already given for spacing the holes in the cylinder levers.

To figure the braking power of a car already equipped, we start with the force acting on the piston rod and work towards the truck levers by the aid of the formulæ given.

To use the formulæ, first determine the class of lever with which we have to deal.

The foregoing illustrations were a practical applica-

tion of the formulæ, in calculating the proportion of levers that would give a proper braking power on a car of known weight.

We will now consider a shorter method of calculating the proportion of levers for a Hodge and for the Stevens systems of leverage for this same car.

Fig. 90 (page 278) shows the Hodge system of levers. If this were a Stevens system, the floating lever would not be used, and the other end of the connection to the live lever of the truck would connect directly with the outer end of the cylinder lever. With the Stevens system the hand-brake connection runs from the brake mast direct to the top of the dead lever.

(1.) *To find the total braking power required:*

Subtract 10 per cent. of the weight of the car on the wheels to be braked for passenger cars, and 30 per cent. for freight cars.

(2.) *To find the leverage required:*

Divide the total braking power required by the total pressure on the piston.

(3.) *To find the proportion of the brake-beam levers:*

Divide the entire length of the lever by the short end if the truck has a bottom connection; if it has a middle connection, divide the long by the short end.

(4.) *To find the total brake-beam leverage:*

Multiply the proportion of the brake-beam levers by two, for the Hodge system, and by four for the Stevens system.

(5.) *To find the proportion of the cylinder lever:*

Multiply the whole length of the lever by the required leverage and divide the product by the sum of the total brake-beam leverage plus the required leverage.

If the required leverage is greater than the total brake-

beam leverage, the long end of the lever must go next to the cylinder; if less, the short end goes next to the cylinder.

The dead and live levers may be of different lengths, but must be of the same proportion to develop the same braking power.

EXAMPLE.

Hodge system of levers, as shown on page 278, also the lengths of the truck levers.

Weight of car, 60,000 lbs.

A 12-inch cylinder is used with this weight of car.

A pressure of 6,800 lbs. is developed on a 12-inch piston, using a quick-action triple valve.

(1.) 60,000 lbs. less 10 per cent. is 54,000 lbs.

(2.) 54,000 lbs. ÷ 6,800 = 7.94, leverage required.

(3.) 35 ÷ 7 = 5, brake-beam leverage.

(4.) 5 × 2 = 10, total brake-beam leverage.

Assume the length of the outside holes of the cylinder lever to be 30 inches.

(5.) (30 × 7.94) ÷ (7.94 + 10) = 13.28 inches.

30 − 13.28 = 16.72 inches.

The required leverage is less than the total brake-beam leverage, hence the short end of the cylinder lever connects to the piston.

Stevens system—same car.

(1.) 60,000 lbs. less 10 per cent. is 54,000 lbs.

(2.) 54,000 ÷ 6,800 = 7.94, the leverage required.

(3.) 35 ÷ 7 = 5, the brake-beam leverage.

(4.) 5 × 4 = 20, the total brake-beam leverage.

The cylinder lever is 30 inches between outside holes.

(5.) (30 × 7.94) ÷ (20 × 7.94) = 8.53 inches.

30 − 8.53 = 21.47 inches.

The required leverage is less than the total brake-beam leverage, hence, according to the rule, the short end of the cylinder lever (8.53 inches) connects to the piston.

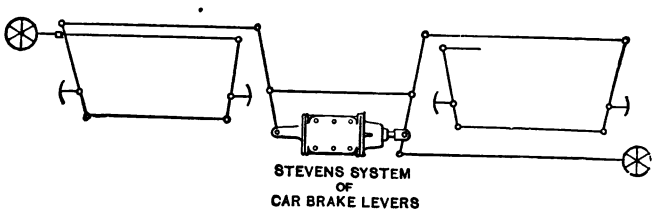


FIG. 91.

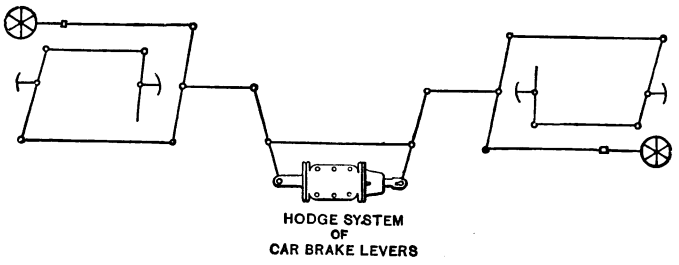


FIG. 92.

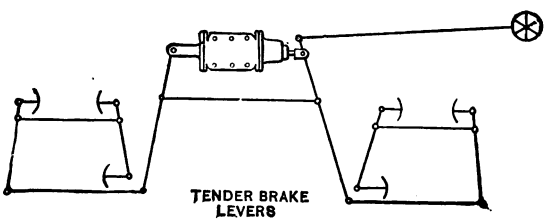


FIG. 93.

*Q. Give a rule by which the braking power on practically any engine, tender or car can be calculated.*

A. Multiply the force acting by the distance from the force to the fulcrum, and divide this product by the distance from the work to the fulcrum; the result will be the work that can be accomplished.

In this rule let F = force,
W = work,
$a$ = distance from the point at which the force is applied to the fulcrum,
$b$ = distance from the fulcrum to the point at which the work is to be accomplished.

Then we have the following formula which can be used:

$$W = \frac{F \times a}{b}$$

*Q. What must be determined to use this rule intelligently?*

A. It must always first be determined which point on any lever is the fulcrum. For instance, in considering the piston lever (Fig. 90) the fulcrum is the rod which connects the piston and cylinder levers when we wish to ascertain the amount of work that can be done at the outer end of the piston lever. If we wish to ascertain the amount of work that can be done on the rod connecting the piston and cylinder levers, the fulcrum would then be the outer pin in the piston lever.

To find the work accomplished on the brake shoes connected to the live truck levers (Fig. 90), the lower pin of the live lever is the fulcrum; but if we wish to know what work is done on the bottom truck connec-

tion by a force acting on the top of the live lever, the point at which the brake shoe is shown represents the fulcrum.

What has been said on the subject of brake leverage in this chapter is all useful, and a thorough understanding of it will enable one to make many short cuts in leverage problems presented for consideration, but the last very simple rule will be found to be sufficient with which to calculate the braking power in practically any system of leverage.

## SIZES OF CYLINDERS TO BE USED ON CARS AND TENDERS OF DIFFERENT WEIGHTS.

16-inch brake cylinder on passenger cars whose light weights exceed 92,000 pounds.

14-inch brake cylinder on passenger cars whose light weights are between 68,000 and 92,000 pounds.

12-inch brake cylinder on passenger cars whose light weights are between 47,000 and 68,000 pounds.

10-inch brake cylinder on passenger cars whose light weights are between 30,000 and 47,000 pounds.

6-inch brake cylinder on freight cars whose light weights are less than 15,000 pounds.

8-inch brake cylinder on freight cars whose light weights are between 15,000 and 40,000 pounds.

10-inch brake cylinder on freight cars whose light weights exceed 40,000 pounds.

8-inch brake cylinder on tenders whose light weights are less than 30,000 pounds.

10-inch brake cylinder on tenders whose light weights are between 30,000 and 47,000 pounds.

12-inch brake cylinder on tenders whose light weights are over 47,000 pounds.

## AMERICAN BRAKE LEVERAGE.

*Q. How do you find the braking power on an engine equipped with the American equalized brake as shown in sketch, page 218?*

A. Multiply the cylinder value, or total push on the piston, by the long lever arm, and divide this product by the short lever arm. This result multiplied by 2 gives the total braking power.

*Q. With the long lever arm 25 inches long and the short arm 5, what braking power would we have, using 12-inch cylinders?*

A. 56,000 pounds.

Thus:

$$5600 \times 25 = 140{,}000$$
$$140{,}000 \div 5 = 28{,}000$$
$$28{,}000 \times 2 = 56{,}000$$

*Q. If any different design of rigging were used than that shown in the sketch, how could the braking power be figured?*

A. First find the power exerted at the bottom of the rocker shaft and use this in connection with the cuts illustrating the different classes of levers.

*Q. What per cent of the total weight on drivers is used as braking power with driver brakes?*

A. Seventy-five per cent of the engine's weight on the drivers when ready for the road.

*Q. What braking power should be used on an engine whose weight on drivers is 90,666 pounds?*

A. 90,666 × .75 = 68,000 pounds.

*Q. What weight should be on the drivers for an engine to have 68,000 pounds braking power?*

A. 68,000 ÷ .75 = 90,666 pounds.

*Q. How should the holes be spaced in levers A and D on an engine having two pairs of drivers, to give an equal braking power on each wheel?*

A. The middle hole in *A* should be equidistant from the two outside ones. The hole in the lever at *D* should be so as to have the connection attached at *k* stand about parallel with the track. The corresponding hole *k* at the other end of the lever *D* must be placed the same distance from the other end.

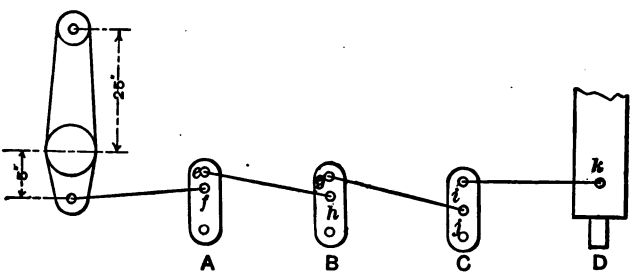


FIG. 94.—AMERICAN EQUALIZED BRAKE.

*Q. How should the holes be spaced in levers A, B, and D, if on a mogul or engine having three pairs of drivers?*

A. The distance *e*, lever *A*, should be one-half the distance *f*. The distance *g*, lever *B*, should be equal to *h*. The hole *k*, lever *D*, should be the same as on an engine having two pairs of drivers.

*Q. How should the holes in the levers A, B, C, and D be spaced on a consolidation or engine with four pairs of drivers?*

A. The distance *e* in lever *A* should be one-third of *f*. The distance *g*, lever *B*, should be one-half of *h*. The distance *i*, lever *C*, should be equal to *j*. The hole *k* in lever *D* should be the same as with an engine having two or three pairs of drivers.

## AIR HOSE.

*Q. What kinds of hose are used in the air brake and signal systems?*

A. Usually one-inch hose is used with signal equipment and cars in passenger, mail, and express service; while inch and one-quarter hose is used exclusively in freight service.

*Q. Is this a standard on all roads?*

A. No; some roads use the inch and one-quarter hose with the brake equipment in both freight and passenger service.

*Q. Would there be any objection to using one-inch hose in freight service?*

A. The chief objection consists in the fact that the small hose presents a greater frictional resistance to the passage of air. This would be especially objectionable when it was desired to make a quick reduction to apply the brakes in quick action.

*Q. What is the object of having different hose couplings for the air and signal hose?*

A. So that brakemen, when in a hurry, cannot couple the brake and signal hose together; some companies paint the signal hose coupling red as a further aid when coupling hose.

*Q. How many cars of air are coupled up and operated?*

A. Some roads regularly couple as high as 115 cars and operate the brakes with the air supplied by a nine and one-half inch pump.

*Q. Could this be done with a poor hose?*

A. No, since with poor hose there is often considerable leakage not discernible with the naked eye.

*Q. How may porous hose be detected?*

A. By coating the outside with soapsuds.

*Q. What is the usual life of air hose?*

A. Passenger, about two and one-half years; freight, about two years.

*Q. How is air hose bought?*

A. Some on account of cheapness, some by a time guarantee, and others by specification, the roads being willing to assume the risk in the latter case if they know the hose to be first-class when put in service.

*Q. What is the object of the markings shown on the hose (Fig. 94)?*

A. It is for the purpose of obtaining a record of the life of the hose. The one applying the hose should cut off the figure representing the month, in the line headed by the letter A, and the figure which shows the year. When the hose is removed the year and month should also be shown by cutting off the proper numbers.

The following specifications have been recommended to railroads by the Peerless Rubber Manufacturing Company of New York. They have been in force for some time on many of the large railroads throughout the country, and the results obtained have been such as to cause them to believe that better results are obtained by buying hose from specification rather than in the open market.

AIR-BRAKE AND SIGNAL-HOSE SPECIFICATIONS ISSUED BY PEERLESS RUBBER MANUFACTURING COMPANY OF NEW YORK.

All air-brake and signal hose must be soft and pliable,

and not less than 4-ply. The tube to be hand made and so firmly joined to the canvas that it cannot be pulled away without breaking or splitting the tube. The tube, friction, coating and cover to be of the same quality of gum.

All cotton duck to be used in air-brake and signal hose to weigh not less than from 20 oz. to 22 oz. per yard, 38 to 40 inches wide, to be loosely woven and long fibre. Duck must be frictioned on both sides, and, in addition to the friction, must have a heavy coating of gum on one side, so when made up there will be a distinct layer of gum between each ply of duck. Hose without the coating will be rejected.

FIG. 95.

The tube to be not less than 15-gauge thick. The inside diameter of freight hose must not be more than $1\frac{5}{16}$ inches nor less than $1\frac{1}{4}$ inches. Outside diameter not more than 2 inches nor less than $1\frac{7}{8}$ inches. The inside diameter of passenger and signal hose must not be more than $1\frac{1}{16}$ inches nor less than 1 inch. Outside diameter must not be more than $1\frac{3}{4}$ inches nor less than $1\frac{11}{16}$ inches. Diameter to be as specified throughout the entire length. All short lengths to have capped ends. All caps must be vulcanized on, not pasted or cemented on.

Each standard length of air and signal hose must be branded with the name of the manufacturer, and the year and month in which made, name of road, and a table of raised letters denoting the years and months as illustrated above.

*All Air-Brake and Signal Hose must stand the following test.*

*Friction Test.*—The friction will be determined by the force required to unwind a section of hose 1 inch in length, the force being applied at the point of separation, as per sketch. With a force of 25 lbs., the separation must be uniform and regular, and when unwound from outside to tube, the average speed must not be greater than 12 inches in 20 minutes.

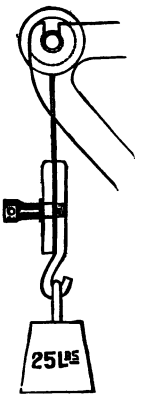

FIG. 96.

*Stretching Test.*—The 1-inch section of the tube or inner lining should then be taken from the piece of 1-inch section used in the friction test, and cut at the thickest part of lap; then marks 2 inches apart will be placed on it and it must be stretched 10 inches from the aforesaid 2-inch marks, and released immediately. It will then be remarked, and will be stretched 10 inches, or 400 per cent. without breaking, to remain stretched 10 minutes, and to be measured 10 minutes after the strain is removed. In no case must the piece show more than ¼-inch permanent set or elongation in 2 inches. Hose should be at least from 3 to 7 days old before testing.

All rejected material may be returned, the shipper paying freight both ways.

## A FEW PRACTICAL FORMULÆ AND RULES FOR AIR-BRAKE INSPECTORS.

(1) $\frac{\text{Braking power}}{\text{Cylinder value}} = \text{Total leverage.}$

(2) $\frac{\text{1-inch piston travel}}{\text{Total leverage}} = \text{Shoe movement for 1 inch of piston travel.}$

(3) $\frac{\text{Shoe wear}}{\text{Shoe movement for 1 inch of piston travel}} = \text{Total increase of piston travel to wear out a set of shoes.}$

ILLUSTRATION OF ABOVE FORMULÆ.

Assume:

Weight of car = 40,000 pounds; it is to be braked at ninety per cent of its weight; 10-inch cylinder used; shoes $1\frac{1}{2}$ inches thick.

Ninety per cent of 40,000 = 36,000 pounds. The cylinder value, or push on the piston, of a 10-inch cylinder, when the brake is set in emergency with a quick-action triple, is 4700 pounds.

Substituting values in the equations:

$$(1)\ \frac{36{,}000}{4700} = 7.66$$

7.66 is the total leverage; that is, the push of 4700 pounds on the piston must be multiplied 7.66 times to give the proper braking power.

$$(2)\ \frac{1''}{7.66} = .13'' \text{ or } \frac{13}{100}$$

$\frac{13}{100}$ of an inch is the distance that the brake shoes will move for each inch that the piston travels.

$$(3)\ \frac{1\frac{1}{2}}{.13} \text{ or } \frac{1.5}{.13} = 11.5 \text{ or } 11\frac{1}{2}$$

$11\frac{1}{2}$ inches is the distance the piston travel would have to increase to wear out a set of shoes $1\frac{1}{2}$ inches thick.

To find the area of a piston:

*Multiply the diameter of the piston by itself, and this product by the decimal .7854.*

Example:

What is the area of an 8-inch piston?

$8'' \times 8 = 64$ sq. in.
64 sq. in. $\times$ .7854 = 50.26 sq. in.

50.26 square inches is the area of the piston; that is, the number of square inches in a circle 8 inches in diameter.

To find the volume or cubical contents of a cylinder:

*Multiply the diameter of the cylinder by itself, this product by the decimal .7854, and this product by the length of the cylinder.*

Example:

What is the volume of a cylinder 8 inches in diameter and one foot long?

$8'' \times 8 = 64$ sq. in.
64 sq. in. $\times$ .7854 = 50.26 sq. in.
50.26 sq. in. $\times$ 12 = 603.12 cu. in.

To find the pressure at which an auxiliary and brake cylinder will equalize with a full service application of

the brake using an initial pressure of seventy pounds in the train line and auxiliary:

*Multiply the capacity of the auxiliary in cubic inches by eighty-five pounds (seventy pounds train-line pressure plus fifteen pounds atmospheric pressure), and divide the product by the combined capacity of the auxiliary and brake cylinder. The quotient will be, approximately, the pressure plus fifteen pounds atmospheric pressure. This is not absolutely correct, as it does not take into account the clearance in the cylinder back of the piston with the brake released. This usually corresponds to about 1 inch of piston travel.*

Example:

Capacity of freight auxiliary reservoir = 1625 cu. in.

Capacity of 8-inch brake cylinder with 8-inch piston travel = 400 cu. in.

$$1625 \times 85 = 138{,}125. \quad 138{,}125 \div (1625 + 400) = 68$$

68 lbs.—15 = 53 lbs.

Fifty-three pounds is the pressure obtained in the auxiliary and brake cylinder with the brake full set in service.

The formulæ given below will be found convenient with which to find either the proper width of a lever to withstand a given strain, or to ascertain the fibre strain on a lever.

$R$ = Fibre strain.

$l$ = Distance from point power is applied to center of pin at point for which dimension or amount of fibre strain is desired.

$b$ = Equals thickness of lever.

$d$ = Width of lever.

No allowance is made for the metal taken out of the

lever for the pin holes, as the removal of metal has no practical weakening effect, same being so close to the central axis.

In general railroad air-brake practice, from 18,000 to 20,000 is considered a safe fibre strain.

$$R = \frac{6\,Pl}{b\,d^2}$$

$$d = \sqrt{\frac{6\,Pl}{R\,b}}$$

Example:

To find the fibre strain at the middle hole of a lever 24 inches between the push-rod and outside holes, middle hole 12 inches from push-rod hole, width of lever 4.336 inches at middle hole, lever 1 inch thick, 10-inch cylinder used, and a maximum pressure of 60 pounds obtained in the cylinder, giving a total power of about 4,700 pounds acting on the piston.

$$R = \frac{6\,Pl}{b\,d^2}\quad R = \frac{6 \times 4700 \times 12}{1 \times 4.336 \times 4.336}$$ or $R = 18{,}000$ pounds.

Example:

Under the same conditions as the preceding example find the proper width of the lever at the middle hole, permitting of a maximum fibre strain of 18,000 pounds.

$$d = \sqrt{\frac{6\,Pl}{R\,b}}$$ or $$d = \sqrt{\frac{6 \times 4700 \times 12}{18{,}000 \times 1}}$$ or

$$d = \sqrt{18.8}$$ or $d = 4.336$ inches.

Width of lever should be 4.336 inches.

To reduce stops at different speeds to an equivalent stop at the same speeds, all other conditions being equal.

*Rule: Multiply the known distance by the square of the speed for which proportionate distance is desired, and divide the product by the square of the speed at which known stop was made.*

This rule is only practical with speeds which are not more than three miles above or below the speed for which proportionate stop is to be calculated.

Example:

If a stop at 58 miles per hour is made in 1,600 feet, and one at 62 miles per hour in 1,800 feet, in what distance would each of these stops have been made at a speed of 60 miles per hour?

Square of 58 miles = 3364.
Square of 62 miles = 3844.
Square of 60 miles = 3600.

$$\frac{1600 \times 3600}{3364} = 1712.$$

$$\frac{1800 \times 3600}{3844} = 1691.$$

In the first case the stop at 60 miles per hour would have been made in 1,712 feet, while in the latter it would have taken 1,691 feet.

# APPENDIX

## UP-TO-DATE AIR BRAKE CATECHISM

This appendix contains a description of the Improved Westinghouse Equipment developed for use on locomotives and freight cars. This new equipment is the result of the changed conditions of road service in which the trains are of much greater length than those at the time of the inception of the old standard quick-action triple valve. Fully describes and illustrates the principal parts of what goes to make up the new equipment, viz.:

**Nos. 5 and 6 ET Locomotive Brake Equipments. H-5 Brake Valve, SF (independent) Brake Valve. SF Pump Governor. Distributing Valve. B-4 Feed Valve. B-3 Reducing Valve. Safety Valve. K (quick-service) Triple Valve. Compound Pump.**

BY ROBERT H. BLACKALL

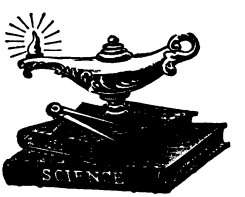


*Fully illustrated by folding plates and detailed engravings*

NEW YORK:
THE NORMAN W. HENLEY PUBLISHING CO.
132 NASSAU STREET
1908

COPYRIGHTED, 1907
BY
THE NORMAN W. HENLEY PUBLISHING CO.

COPYRIGHTED, 1908
BY
THE NORMAN W. HENLEY PUBLISHING CO.

# PREFACE TO TWENTY-THIRD EDITION.

THE issuing of the present edition of this book, Up-to-date Air-Brake Catechism with an appendix, shows that the book is filling the want it was designed to meet.

The changed conditions of service which now prevail, and which consist in longer trains, cars of heavier capacity and locomotives with a power and weight commensurate with their increased duties, has made imperative some radical changes in the air brake art. The original brake was designed with the idea in mind that the maximum length of train would be fifty cars, and the capacity of these cars 60,000 pounds. The usual capacity is now 100,000 pounds, the number of cars in a train is often over 100, and the hauling power of the locomotive has kept pace. The result of these changes has been that the apparatus which has been in use for so many years is not adequate to handle, with the desired efficiency, the long and heavy trains of to-day.

To meet these conditions the Westinghouse Air Brake Company has developed an engine and car equipment by the use of which even better results are obtained with the long and heavy trains than could be obtained with the older equipment and the shorter trains.

The appendix to this book has been written with a view of explaining the operation of this new equipment with which it will be necessary for railroad employees to become familiar to avail themselves of the many advantages which it makes possible.

The author wishes to take this opportunity to again thank the railroad public for their continued support which has been very gratifying to him.

April, 1908. ROBERT H. BLACKALL.

# TABLE OF CONTENTS (APPENDIX)


| | PAGE |
|---|---|
| No. 5 E T LOCOMOTIVE BRAKE EQUIPMENT | 307–349 |
| Brake Valves (automatic and independent) | 314–326 |
| Distributing Valve | 327–336 |
| Safety Valve | 337–338 |
| Feed Valves, B–4 and B–3 | 339–341 |
| SF–4 (excess-pressure) Pump Governor | 342–345 |
| Defects of ET Equipment | 346–349 |
| K Triple Valve (quick-service) | 350–357 |
| 8½-Inch Cross-Compound Pump | 358–367 |
| No. 6 E T Locomotive Brake Equipment | 368–373 |

# LIST OF ILLUSTRATIONS OF WESTINGHOUSE IMPROVED EQUIPMENT (APPENDIX).


PAGE

Plate XIII. Improved Locomotive and Tender Equipment (Schedule ET).

Fig. 97. Piping Diagram of ET Equipment . . .

Fig. 98. Distributing Valve and Double-Chamber Reservoir, Pipe Connections . . .

Fig. 99. Distributing Valve and Double-Chamber Reservoir, Sectional Reservoir . . .

Fig. 100. Diagrammatic View . . . . . .

Fig. 101. Distributing Valve—Release Position—Automatic or Independent . . . .

Fig. 102. Distributing Valve—Independent Application . . . . . .

Fig. 103. Distributing Valve—Independent Lap . .

Fig. 104. Distributing Valve—Automatic Service Position . . . . . .

Fig. 105. Distributing Valve—Service Lap . . .

Fig. 106. Distributing Valve—Emergency Application

Fig. 107. Distributing Valve—Emergency Lap . .

Fig. 108. Distributing Valve—Independent Release after Brake has been applied automatically . . . . . .

Fig. 109. Graduating Valve, Equalizing Slide Valve and Slide-Valve Seat of the Distributing Valve . . . . . .

Fig. 110. Distributing Valve showing Connections .

Fig. 111. Safety Valve . . . . . .

Fig. 112. Type H Brake Valve . . . . . .

Fig. 113. Type H Brake Valve, Section of Valve and Plan of Seat . . . . . .

## List of Illustrations (Appendix).


PAGE

Fig. 114. Type H Brake Valve, showing the different Positions of the Handle . . . .

Fig. 115. Type H Brake Valve, Horizontal and Vertical Sections . . . . . .

Fig. 116. Exterior View of SF (independent) Brake Valve . . . . . .

Fig. 117. SF Brake Valve, Shaded Vertical and Horizontal Section . . . . . .

Fig. 118. SF Brake Valve, Horizontal and Vertical Line Section and Plan of Rotary . .

Fig. 119. B-4 Feed Valve . . . . . 339

Fig. 120. SF-4 (excess-pressure) Pump Governor . . 343

Plate XIV. Views of the K Type (quick-service) Triple Valve.

Fig. 121. K Triple Valve—Exterior View . . .

Fig. 122. K Triple Valve—Cross Section . . .

Fig. 123. K Triple Valve, Graduating Valve, Slide Valve, Bush . . . . . .

Fig. 124. K Triple Valve—Full Release Position . .

Fig. 125. K Triple Valve—Service Position . . .

Fig. 126. K Triple Valve—Service Lap Position . .

Fig. 127. K Triple Valve—Retarded Release Position .

Fig. 128. K Triple Valve—Emergency Position . .

Fig. 129. Cross-Compound Pump—Exterior View . . 359

Fig. 130. Cross-Compound Pump, Up-Stroke of High-Pressure Side . . . . . 361

Fig. 131. Cross-Compound Pump, Down-Stroke of High-Pressure Side . . . . . 363

Fig. 132. Piping Diagram of the No. 6 E T Locomotive Brake Equipment. . . . . 370

UNIVERSITY
OF
CALIFORNIA

# No. 5
# ET LOCOMOTIVE BRAKE EQUIPMENT.

All cuts referred to in this chapter will be found on Plate XIII.

*Q. What does the symbol ET designate?*

A. It designates the Westinghouse new improved engine and tender, or locomotive, brake equipment, the letters *ET* being the initals of the words "Engine" and "Tender."

*Q. In what respect is the ET locomotive equipment an improvement over the standard brake?*

A. In that it consists of fewer parts; that is, it combines practically in one mechanism the present combined-automatic and straight-air brake; and it possesses many improved features in operation. It is easier to understand and to operate and is cheaper to maintain than the present type of combined-automatic and straight-air brake.

*Q. What parts of the present combined-automatic and straight-air brake are displaced by the ET brake?*

A. All triple valves, all auxiliary reservoirs, all pressure retaining valves, all high-speed reducing valves, one brake-pipe feed valve, the reversing cock, and all double-check valves.

*Q. What does Fig. 97 represent?*

A. It represents all the parts of the *ET* equipment, and shows the method of piping them together.

*Q. What are the principal parts of the ET equipment?*

A. Referring to Fig. 97, Plate XIII, it will be seen that they are: an air pump, a main reservoir, an automatic brake valve, an independent brake valve, a duplex pump governor, a double cut-out cock, a distributing valve, a brake-pipe feed valve, and the necessary piping, cut-out cocks, brake cylinders, brake-pipe strainers, angle cocks, and pressure gauges.

*Q. Can the ET equipment be used in all kinds of service, such as high-speed passenger, in freight, and in switching without change or modification of its parts?*

A. Yes; it is an equipment suitable for any kind of engine and train service, and engines equipped with it may be used in the different kinds of service without change or modification of its parts.

*Q. Why is this improved equipment necessary?*

A. Because of the heavier weight of all kinds of modern locomotives, greater weight and speed of passenger trains, greater length of freight trains, there is need of a more positive and more flexible brake than the present standard to control their motion. There is also need of a means of graduating at will both the application and the release of the locomotive brake as well as releasing the brakes simultaneously with, or independently of, the train brakes; this may be done with the *ET* brake.

*Q. Can shorter and smoother stops be made with trains that are hauled by locomotives equipped with this brake than can be made with those hauled by locomotives having the older type?*

A. Yes; considerably shorter and smoother stops

can be made. Shorter because of the maintaining feature of the distributing valve and smoother because of the independent brake valve and the graduated release feature in connection with the automatic brake valve. It also gives 20 per cent. more braking power in an emergency application.

*Q. What other special advantage is obtained by the use of this equipment?*

A. Brakes on long freight trains may be released at slow speeds with less danger of the train being broken in two.

*Q. What is the distinguishing valve of the ET equipment?*

A. The distributing valve.

*Q. No auxiliaries being used with the ET brake, where is the air taken from that is used in the brake cylinders to apply the brakes?*

A. From the main reservoir.

*Q. Is this true both when an automatic, and when an independent application of the brakes is made?*

A. Yes; with either kind of application, the air used in the brake cylinders is taken from the main reservoir, the pressure first being reduced by a reducing valve.

*Q. How are the brakes operated independently of the train brakes?*

A. By the use of the independent brake valve.

*Q. How are the engine and train brakes operated simultaneously?*

A. By the use of the automatic brake valve.

*Q. Referring to Fig. 97, what is the purpose of the main reservoir cut-out cock?*

A. When necessary to remove valves to make repairs to any part of the equipment after it is charged, this cock may be closed to prevent loss of main reservoir air.

*Q. Why is it that but one brake-pipe feed valve is used with this equipment?*

A. Because the feed valve used has an improved regulating attachment by means of which it can readily be changed from one brake-pipe pressure to another.

*Q. What is this brake-pipe feed valve called?*

A. The *B*4 feed valve.

*Q. In what respect does the pump governor used with this equipment differ from that used with the older?*

A. In that it automatically adjusts the excess pressure whenever the adjustment of the feed valve is changed from one brake pipe pressure to another.

*Q. By what name is this new governor known?*

A. It is designated the *SF* 4, or excess pressure, governor.

*Q. What is the purpose of the double cock under the automatic brake valve?*

A. Its purpose is to enable the engineers of second, or helping, locomotives when double heading to cut out this brake valve, and to open the exhaust port of the distributing valve, to the atmosphere, through the cut-out cock to the brake valve so that the leading engineer can operate the brakes on those engines. When the small port in the double cut-out cock is opened the brake pipe port is closed and vice versa.

*Q. Will turning the double cock only, enable the leading engineer to operate the brakes on the other locomotives?*

A. No; the engineer of the second engine must also place the handle of his automatic brake valve in lap position.

*Q. Why is this necessary?*

A. Because the automatic brake valve, in this position only, opens the distributing valve exhaust port connection to the atmosphere.

*Q. What is the purpose of the independent brake valve?*

A. It enables the engineer to operate the locomotive brakes in the same manner that he does now with the straight-air brake, and it also enables him, when the automatic brake is applied, to regulate the cylinder pressure on the locomotive, or to release entirely the locomotive brakes, without affecting the train brakes.

*Q. When the brakes have been applied by the use of the automatic brake valve on the lead engine, can the helper engineer release the brakes on his engine?*

A. Yes; by placing the independent brake valve in release position. He can also reapply them if desired.

*Q. Should the engineer after making an automatic application, entirely release the air from the brake cylinders by the use of the independent brake valve, could he again apply them independently of the automatic brake?*

A. Yes.

*Q. How?*

A. By moving the handle of the independent brake valve to application position, admitting the desired pressure, and then moving it back to running position. It could be returned to lap position, but if this were done, the brakes on the locomotive would not release when the automatic brake valve handle was placed in running position.

*Q. Has the engineer the means of knowing how much pressure is being put into the locomotive brake cylinder at all times?*

A. Yes; he has a single-pointer brake-cylinder air gauge in the cab which indicates the pressure.

*Q. What is the maximum pressure that can be obtained in the brake cylinder with the independent brake valve?*

A. Forty-five pounds.

*Q. How is the independent brake pressure regulated?*

A. By means of the pressure reducing valve, Fig. 97.

*Q. Does this pressure reducing valve serve the independent brake only?*

A. No; it also does duty for the train air signal when the locomotive is equipped with the signal apparatus.

*Q. What is the purpose of the combined strainer and check valve used in the signal pipe?*

A. It prevents dirt and other foreign matter from getting to the check valve, causing it to leak, and the check valve prevents back flow of air from the signal pipe to the independent brake valve while the latter is being used.

*Q. If a pump should break down on the second engine, and inasmuch as the air for braking purposes is taken from the main reservoir, could the brakes be operated on this engine?*

A. Yes; the engineer could charge the main reservoir by placing the brake-valve handle in release position and open the cut-out cock under the brake-valve so that the air will flow from the brake-pipe to the reservoir and charge same after which the cut-out should be closed. This should only be done when the train is at rest; otherwise it might interfere with the handling of the brakes by the "lead" engineer.

Owing to the fact that a dead engine is very light, due to the fire having been dumped and the water drained off, it is not good practice to use the brake on the engine on account of the liability of wheel sliding.

Where desired, a few extra parts are furnished by means of which the main reservoir can be charged through a by-pass containing a non-return check, a strainer, a cut-out cock and a diaphragm which necessitates a flow of air from the brake-pipe at a speed such that the air taken from it would not act to apply the train brakes while the main reservoir was charging. This is used to some extent on roads where the grades are such that it is not safe to take an engine down in a train without a brake.

## BRAKE VALVES.

### H 5 AUTOMATIC BRAKE VALVE.

*Q. How many positions has the H 5 automatic brake valve handle?*

A. Six.

*Q. Name them.*

A. They are release, running, holding (see Fig. 114), lap, service application, and emergency application positions.

*Q. What is the purpose of each?*

A. With the exception of release and locomotive brake holding, they are the same as the corresponding positions on the *G6* brake valve which have already been described in the first of the book.

In release position the train brakes can be released but not the locomotive brakes, and moving the handle back and forth between driver brake holding and running, or between release and running position, the locomotive brakes can be graduated off after the train brakes are released or while they are releasing. Locomotive brake holding position, as its name implies, is for the purpose of holding these brakes applied until it is desired to release them. In this position the feed valve controls brake pipe pressure.

*Q. What are the advantages of holding position?*

A. When releasing brakes on long freight trains the slack may be held bunched, thus preventing a break-in-two, especially when release is made at slow speed. This may also be done by leaving the brake-valve handle in release position; the handle is moved to holding position to advoid overcharging. With passenger trains, smoother and more accurate stops can be made, because train brakes may be released just before stopping, and locomotive brakes graduated off afterward.

*Q. When the handle of the H5 brake valve is placed in emergency position is any additional braking power obtained in the locomotive brake cylinders?*

A. Yes; about 20 per cent.

*Q. Explain this.*

A. When the handle is placed in emergency position, the pressure in the brake-valve equalizing reservoir is connected with the application chamber of the distributing valve, thus increasing the pressure therein.

*Q. What are the advantages of this increased pressure?*

A. It helps to make a shorter stop, and effectually prevents possibility of the engine breaking away from the train in emergency applications.

*Q. With what type of equipment is this brake valve (Fig. 112) used?*

A. With the E T engine and tender brake equipment.

*Q. Is its principle of operation any different from that of the G-6 brake valve, already described?*

A. No, it is designed on practically the same lines.

*Q. In what particulars does it differ from the G-6 brake valve?*

A. First, in that it has a permanent base to which it is bolted, rendering it unnecessary to disturb any pipe joints whenever it is necessary to remove it for cleaning and repairs; second, in that it has, in addition to the same positions for the handle, one more position known as the holding in which the locomotive brakes are held applied while the train brakes are releasing; third, that the service exhaust is made at the center of the rotary instead of the side; fourth, that in release position the engine and tender brakes are held applied; fifth, in emergency application position it connects the equalizing reservoir with the application chamber of the distributing valve, thus increasing the pressure in the latter and hence in the brake cylinders, about twenty per cent; sixth, it has a feed valve pipe connection; seventh, a double heading pipe connection.

*Q. What is Fig. 112?*

A. It is a view of the exterior of the brake valve.

*Q. What does Fig. 114 represent?*

A. It represents the top of the brake valve, and shows the different positions of the handle for operating the valve.

*Q. What do Figs. 113 and 115 show?*

A. Figs. 113 and 115 are views showing all the parts with their numbers and names.

*Q. Name the parts.*

A. They are as follows: 2, Bottom Case; 3, Rotary Valve; 4, Top Case; 5, Pipe Bracket; 6, Rotary Valve; 7, Rotary Valve Key; 8, Key Washer; 9, Handle; 10, Handle Latch Spring; 11, Handle Latch; 12, Handle Latch Screw; 13, Handle Nut; 14, Handle Lock Nut; 15, Equalizing Piston; 16, Equalizing Piston Packing Ring; 17, Valve Seat Upper Gasket; 18,

Valve Seat Lower Gasket; 19, Pipe Bracket Gasket; 20, Small Union Nut; 21, Brake Valve Tee; 22, Small Union Swivel; 23, Large Union Nut; 24, Large Union Swivel; 25, Bracket Stud; 26, Bracket Stud Nut; 27, Bolt and Nut; 28, Cap Screw; 29, Oil Plug; 30, Rotary Valve Spring.

*Q. In Fig. 115 three distinct views are given. Name them.*

A. That at the top is a section showing the rotary valve seat and the arrangement of the ports in it; that at the left is a drawing of the rotary valve, and shows the arrangement of the ports and cavities in it; the lower cut is a longitudinal section through the body of the whole brake valve showing the interior construction, the equalizing discharge piston, and the service exhaust. In this drawing the pipe connections are also shown.

*Q. Explain the pipe connections of the H brake valve.*

A. Referring to the piping diagram, Fig. 97, they are as follows: Main reservoir pipe; feed valve-pipe; brake pipe; independent brake valve and application chamber; double heading; excess pressure pump governor; and one to the air gauge and equalizing reservoir connections.

*Q. Are these connections made to the brake valve proper or to its base or pipe bracket?*

A. They are made to the pipe bracket.

*Q. Explain the operation of the H brake valve.*

A. *Release Position:* In this position the large port *a* of the rotary is brought into full register with the large port *b* (Figs. 113 and 115) leading to the circular cavity that extends around under the rotary seat to port *c*, which leads directly into the brake pipe,

thus providing a direct passage for main reservoir air into the brake pipe. In this position the port *l* which leads from the application chamber through the independent brake valve to the rotary seat is closed so that the application chamber air cannot escape, nor the engine and tender brakes release; the warning port *r* is open to the atmosphere. Ports *j* in the rotary and port *g* in the seat, leading to chamber *D*, are in register so that air can flow freely to this chamber and the equalizing reservoirs connected with it. Port *s* in the rotary and port *p* in the seat are in communication so that main reservoir air can flow to the excess pressure top of the pump governor.

*Running Position:* In this position port *a* in the rotary is blanked by the rotary seat and air at feed valve pressure, then enters the brake valve at port *d* in the rotary seat, leading from the feed valve, passes through cavity *f* in the rotary valve face into port *b* around through the cavity reaching to port *c* and thence to the brake pipe. In this position, brake pipe air goes to chamber *D* and the equalizing reservoir through port *c* in the rotary seat, cavity *k* in the rotary, and port *g*.

In this position port *l* in the seat is in register with port and passage *h* in the rotary, so that air from the application chamber of the distributing valve can escape to the atmosphere, and release the engine and tender brakes. Main reservoir pressure continues to reach the low-pressure governor head through port *s* in the rotary, port *p* in the seat, and a suitable pipe connection.

*Holding Position:* Air from the feed valve pipe flows to the brake pipe through the same ports as in running position, but the port *l* is blanked so that the air cannot escape from the application chamber and the brakes on the engine and tender remain applied and the feed valve controls brake pipe pressure. The

same connection to the governor still exists as in running position.

*Lap Position:* All ports in the brake valve are lapped except port *u*, leading from the double heading pipe, which is then in register with port and passage *h* leading to the central exhaust port *EX*, also to the exhaust port, controlled by the slide valve in the distributing valve. The high-pressure governor head now controls the pump.

*Service Application Position:* Port *e*, the preliminary exhaust port leading from chamber *D* and the equalizing reservoir, is in register with port and passage *h* in the rotary leading into the exhaust *EX*, thus permitting the pressure above the equalizing discharge piston and valve 15 to reduce, and the latter to rise and discharge brake pipe air to the atmosphere. When the brake pipe pressure below the equalizing discharge piston reduces to an amount slightly below that remaining in chamber *D* and the equalizing reservoir it will close the service exhaust and prevent further reduction in brake pipe pressure. The operation of the H brake valve in service applications is precisely the same as that of the G-6 brake valve already described.

*Emergency Position:* The large cavity *x* in the rotary, which leads to the emergency exhaust port *EX*, and the large brake pipe port *c* are in register, so that brake pipe air has a free escape to the atmosphere, thus providing for the quick reduction of brake pipe pressure. At the same time the L shaped cavity *n* in the face of the rotary connects port *g*, leading from the chamber *D* and the equalizing reservoir, with port *l* leading to the application chamber of the distributing valve. This augments the maximum pressure in this chamber about 20 per cent in an emergency application of the brake. Port *j* in the rotary if desired can be made to register with a small port

leading to the sand valve so that the sanding device is automatically put into operation when the brake valve handle is placed in emergency position.

*Q. For what purpose is the plug 29?*

A. This is an oil plug that provides a convenient means of oiling the rotary valve. Whenever the rotary begins to show signs of working hard, this plug may be removed and valve oil poured in until it appears at the level of the hole, when the plug should be screwed back. It should be borne in mind, however, that there should be no air pressure on the rotary when this plug is removed.

*Q. Where does the oil go that is thus poured into the rotary?*

A. It fills up the small annular groove in the body 4, which surrounds the rotary and its seat at their line of meeting.

*Q. How does this oil get upon the rotary seat?*

A. When the rotary is under pressure the oil in the annular groove is also under pressure, and as the rotary is turned in operating the brake, the oil is worked in between the rotary and its seat in a thin film, keeping it nicely lubricated.

*Q. Aside from lubricating the rotary and its seat, does the oil have any other effect on the working of the valve?*

A. Yes, it tends to keep the rotary from leaking.

*Q. When it is desired to remove the brake valve for repairs, what is necessary to do?*

A. Unscrew the bolts and nuts and lift the valve off its base. No pipe connections need to be disturbed.

*Q. After removal to take the valve apart, what is necessary?*

A. Unscrew the cap screws.

*Q. What is the purpose of the small plug, with the side outlet in it, that is screwed in the service exhaust opening?*

A. This small plug is provided with the side outlet to change the direction of the exhaust and prevent the escaping air from blowing on to the feet of the engineman.

## THE INDEPENDENT BRAKE VALVE.

*Q. What is represented in Figs. 116, 117, and 118?*

A. The independent brake valve, Fig. 116 being an exterior view, Fig. 117 a sectional view, showing the rotary seat with its ports and also the arrangement of the interior parts. Fig. 118 shows the different positions of the brake valve handle, a plan of the rotary valve and an interior view of all its parts.

*Q. What are the names of the parts of the independent brake valve as numbered on Fig. 118?*

A. 2, Rotary Valve Seat; 3, Valve Body; 4, Pipe Bracket; 5, Rotary Valve; 6, Rotary Valve Key; 7, Rotary Valve Spring; 8, Key Washer; 9, Return Spring; 10, Return Spring Casing; 11, Casing Screw; 12, Return Spring Clutch; 13, Cover; 14, Cover Screw; 15, Handle; 16, Handle Nut; 17, Latch Spring; 18, Latch; 19, Latch Screw; 20, Oil Plug; 21, Upper Gasket; 22, Lower Gasket; 23, Bracket Stud; 24, Bracket Stud Nut; 25, Bolt and Nut; 26, Cap Screw.

*Q. How is this valve connected up with respect to piping?*

A. As shown in the piping diagram, Fig. 97, Plate XIII., it has one pipe connection to the automatic brake valve, one to the application chamber of the distributing valve, and one to the air supply.

*Q. Does it have these pipe connections made direct to the brake valve or are they made to a permanent base the same as with the automatic brake valve?*

A. The pipes are directly connected to a bracket and it is not necessary to disturb pipe joints to remove the operative parts of the valve.

*Q. Why is the independent brake valve supplied in addition to the automatic brake valve with the ET equipment?*

A. So that the locomotive brakes, if desired, may be operated independently of the automatic brakes both on the engine and on the train at all times.

*Q. Name the different positions for the brake valve handle.*

A. They are release, running, lap, and service positions.

*Q. Explain the different positions of the Independent Brake Valve (Fig. 118) ?*

A. The position at the left is release; this can be used regardless of the position of the automatic brake valve handle to obtain an independent release. If the hand is removed from the handle when in this position the spring automatically returns it to running position.

Running position is the normal position when the valve is not in use. If the automatic brake valve is in running position the brakes on the locomotive can be released by placing the Independent Brake Valve handle in running position. It is necessary for the handle

to be in this position for the brakes on the locomotive to release when the handle of the automatic brake valve is placed in running position.

Lap position ; in this position all ports are closed.

Service position ; the use of this position permits air pressure to flow to the application chamber of the distributing valve, thus causing the brakes to apply on the locomotive. Different degrees of speed can be obtained in the application of the brakes depending upon whether or not the handle is moved to the extreme service position or merely close to the extreme travel of the valve.

*Q. When the handle is in release position, how are the brakes released?*

A. When the handle is in release position port *d*, Fig. 118, leading to the application chamber of the distributing valve is open to the atmosphere through exhaust port *g* in the rotary and central exhaust port *h* in the seat, so that the air can escape from the application chamber thus permitting the brakes to release.

*Q. When the handle is placed in release position, will it remain there if the hand is removed?*

A. No, it will be returned automatically to running position by return spring *g*.

*Q. Where should the handle be carried when the independent valve is not in use?*

A. Always in running position.

*Q. What is the relation of the ports in running position?*

A. In running position port *d* and port *c* in the rotary seat are in communication through passage *f* in the rotary, so that air from the application chamber may pass through the independent brake valve to the automatic brake valve, where it can escape to the at-

mosphere, when the handle of the latter is in running position.

*Q. Why are ports d, c, and passage f so arranged?*

A. In order to enable the engineer, whenever operating the automatic brake, to hold the locomotive brake applied when releasing the automatic brakes; that is, to enable him to control the escape of air from the application chamber when releasing.

*Q. How are the brakes applied independently?*

A. By moving the handle to service position and admitting air to the application chamber.

*Q. How are the ports arranged in service position?*

A. Supply port *b* and service port *d* are connected by the circular cavity *e* and air can flow from the supply direct to the application chamber.

*Q. What is lap position for?*

A. To blank all ports when the brakes have been applied with the desired degree of force.

*Q. What is the maximum brake cylinder pressure obtainable with the independent brake valve?*

A. Forty-five pounds.

*Q. Why is this?*

A. Because the air that comes from the main reservoir to the independent brake valve must first pass through a pressure-reducing valve, adjusted at 45 pounds; this valve is located in the supply pipe connection at a point before it reaches the independent valve.

*Q. Trace the air through the independent brake valve?*

A. Air from the main reservoir, reduced in pressure to 45 pounds, enters the brake valve, at the sup-

ply connection, Fig. 118, passes up through port *b* in the seat to the circular cavity *e* in the face of the rotary and through the port at the left end of this cavity to the top of the rotary. There is always independent brake valve pressure, 45 pounds, on top of the rotary with the handle of the brake valve in any one of its positions. With the handle in service position, port *b* and port *d* are connected by the cavity *e* and air can flow into application chamber pipe to the application chamber of the distributing valve to apply the brakes. With the handle in lap position communication between the various ports is cut off and air cannot flow in any direction through the valve. With the handle in running position, the passage *f* on the rotary, between the top and the face, connects port *d* from the distributing valve and port *c*, the latter leading to the automatic brake valve, so that when the handles of both valves are in running position the air may escape from the application chamber to the atmosphere and release the brakes. With the handle in release position, cavity *g* in the rotary connects port *d* with the central exhaust port *h* leading to the atmosphere.

*Q. When is it necessary to use the release position of the independent brake valve in order to release the locomotive brakes or reduce the brake cylinder pressure?*

A. Only when the handle of the automatic brake valve is not in running position.

*Q. If it is desired to remove the brake valve for cleaning or repairs what is it necessary to do?*

A. Unscrew the nuts from bolts 25 and take the valve off its base.

*Q. How is the valve taken apart to get at the interior parts?*

A. Unscrew the cap screw 26, the cover screws 14, and the nut 16, and all parts of the valve may be separated.

*Q. What is the function of the spring 7?*

A. It keeps the key washer 8 and the rotary valve key 6 up from the rotary and makes the washer press against the valve body 31, thus preventing leakage by the rotary valve key when the pump is first started. It also serves to hold the rotary on its seat when there is no pressure and thus prevents dirt from getting on the valve seat.

*Q. With the independent brake valve can the locomotive brakes be applied and released under any and all conditions of service?*

A. Yes, they can be controlled perfectly with the independent brake valve under all conditions of service.

*Q. When the engine is standing alone on ash pits, turntables, or sidings and when doing work about the engine, should the independent brake valve be applied and left applied?*

A. Yes, this practice should be followed at all such times.

*Q. Why is it important to do this?*

A. To avoid possibility of the locomotive moving when not desired, as from a leaky throttle or other cause.

## THE DISTRIBUTING VALVE.

*Q. What do Figs. 98 and 99 represent?*

A. They represent the distributing valve and reservoir, showing its general appearance, pipe connections, and also the divided reservoir, with its pressure chamber and application chamber.

*Q. Name the pipe connections to the distributing valve, and describe them.*

A. Referring to Fig. 98 the connection marked "*SUP*" is the supply pipe connection. The supply pipe connects the main reservoir pipe and the distributing valve. The connection marked "*ABV*" is the double heading pipe, and connects the exhaust port through the equalizing slide valve of the distributing valve with the double cut-out cock and the automatic brake valve. The lower connection marked "*SBV*" connects the distributing valve and the independent brake valve, and extends through the independent brake valve to the automatic brake valve.

Referring to Fig. 99, the upper connection is the one that connects the distributing valve to the brake cylinders. The lower connection is the one between the brake pipe and the distributing valve.

*Q. What is the function of the distributing valve?*

A. To admit air to, and to exhaust it from, all the brake cylinders on the locomotive, both in automatic and in independent applications, and to maintain automatically the desired cylinder pressure regardless of cylinder leakage and variation in piston travel.

*Q. What are the purposes of the stop cocks in the brake cylinder pipe?*

A. In case it is desired to cut out any one or all of the brakes for any cause, such as burst hose or broken downbrake rigging, they may be closed to prevent the brakes from applying.

*Q. Should the hose burst either in front of the engine-truck brake or of the tender-brake cylinder during a brake application, would the other brakes release?*

A. No.

*Q. Why is this?*

A. Because of the special choke fittings (Fig. 97) located between the stop cocks and the brake cylinder, which prevent air from passing through them faster than the distributing valve can supply it.

*Q. What is the standard brake pipe pressure carried with the ET brake?*

A. For the ordinary brake 70 pounds; for the high-speed brake 110 pounds; and for the high-pressure control 90 pounds.

*Q. What does Fig. 110 represent?*

A. It is a sectional drawing showing the interior of the distributing valve as actually constructed.

*Q. Referring to Figs. 99 and 110, what are the names of the parts as numbered?*

A. The proper names of the different parts of the distributing valve are as follows: 2, Body; 3, Application Valve Cover; 4, Cover Screw; 5, Application Valve; 6, Application Valve Spring; 7, Application Cylinder Cover; 8, Cylinder Cover-Bolt and Nut; 9, Cylinder Cover Gasket; 10, Application Piston; 11, Piston Follower; 12, Packing Leather Expander; 13, Packing

Leather; 14, Application Piston Nut; 15, Application Piston Packing Ring; 16, Exhaust Valve; 17, Exhaust Valve Spring: 18, Application Valve Pin; 19, Graduating Stem; 20, Graduating Spring; 21, Graduating Stem Nut; 22, Upper Cap Nut; 23, Equalizing Cylinder Cap; 24, Cylinder Cap Bolt and Nut; 25, Cylinder Cap Gasket; 26, Equalizing Piston; 27, Equalizing-Piston Packing Ring; 28, Graduating Valve; 29, Graduating-Valve Spring; 31, Equalizing Slide Valve; 32, Equalizing Slide-Valve Spring; 33, Lower Cap Nut; 34, Safety Valve; 35, Double Chamber Reservoir; 36, Reservoir Stud and Nut; 37, Reservoir Drain Plug; 38, Distributing-Valve Drain Plug; 39, Application-Valve Cover Gasket; 40, Application-Piston Cotter; 41, Distributing Valve Gasket.

*Q What do Figs. 100 to 108 inclusive represent?*

A. They are diagrammatic drawings that represent the distributing valve in all of its different operative positions.

*Q. Name these positions.*

A. They are Fig. 101, Release, Automatic or Independent; Fig. 102, Independent Application; Fig. 103, Independent Lap; Fig. 104, Automatic Service; Fig. 105, Service Lap; Fig. 106, Emergency; Fig. 107, Emergency Lap; Fig. 108, Release Position, when locomotive brake is released by independent brake-valve after an application by brake pipe reduction.

*Q What is represented in Fig. 109?*

A. Fig. 109 represents the plan of the graduating valve, shows two views of the slide valve, face and plan, and a plan of the slide valve seat.

These views show the arrangement of ports as they actually are constructed, and are not diagrammatic drawings.

*Q. How does the distributing valve charge up the pressure chamber of the double reservoir?*

A. In precisely the same manner that a triple valve charges an auxiliary reservoir; that is, referring to Fig. 100, brake pipe air enters the distributing valve at *BP*, fills chamber *p*, and flows through the small feed grooves at the top of piston 26 to the slide valve side of this piston, and thence to the pressure chamber through port *o* until the pressure in this chamber is equal to that in chamber *p* and the brake pipe.

*Q. Then the pressure in the pressure chamber, when fully charged, is equal on both sides of piston 26?*

A. Yes.

INDEPENDENT APPLICATION.

*Q. What takes place in the distributing valve when the handle of the independent brake valve is placed in service position?*

A. As shown in Fig. 102, air is admitted direct from this valve to the application chamber, forming a pressure therein which causes the application piston 10, to move forward. This in turn moves the brake cylinder exhaust valve 16, and the application valve 5, over until the former closes the brake cylinder exhaust port and the latter uncovers port *b*, leading to the brake cylinders. When port *b* is uncovered, main reservoir air from chamber *a* is free to flow to the brake cylinders.

*Q. After the pressure in the brake cylinders becomes slightly greater than that in the application chamber what takes place?*

A. The application piston 10 and the valves move to the independent lap position, as shown in Fig. 103. To move piston 10 to lap the spring 20 aids the cylinder pressure.

*Q. How is this valve made to assume this position?*

A. When the pressure in chamber *b* is slightly greater than that in chamber *g*, piston 10 and application valve 5 move back until valve 5 laps port *b*, where further flow of main reservoir air to the brake cylinder is cut off, and the brake remains applied with a pressure equal to or slightly in excess of that in the application chamber connected with chamber *g*.

*Q. Suppose that after application valve 5 moves to lap position leakage of air from the brake cylinders should cause the pressure therein to fall, what would occur?*

A. As soon as the pressure in chamber *b* fell slightly below that in chamber *g*, the application piston 10 would be forced to the right and application valve 5 would open port *b* and admit main reservoir air again to supply the leakage and maintain the brake cylinder pressure practically equal to that in the application chamber and chamber *g*.

*Q. How are the brakes released after an independent application?*

A. By placing the handle of the independent brake valve in running position, when the air in the application chamber will escape to the atmosphere; the pressure in chamber *b* will then force the application piston and application valve to release position, as shown in Fig. 101, and brake cylinder air will then escape to the atmosphere through the exhaust ports in exhaust valve 16, and in the body of the distributing valve.

*Q. Where must the handle of the automatic brake valve be in order that the air may escape from the application chamber when the handle of the independent brake valve is in running position?*

A. In running position.

*Q. Does the equalizing piston 26 and its attached parts operate during an independent application and release?*

A. No; they remain inoperative, as shown in Figs. 101, 102 and 103.

### AUTOMATIC OPERATION.

*Q. How is an automatic service application of the brake made?*

A. By moving the handle of the automatic brake valve to service position and making the desired brake pipe reduction.

*Q. When a reduction in brake pipe pressure takes place, what happens in the distributing valve?*

A. With the pressure chamber charged equal to that in the brake pipe, a reduction in brake pipe pressure causes equalizing piston 26 to move to the right (Fig. 104), carrying with it slide valve 31, which closes the exhaust port leading from the application chamber to the double heading pipe, and the graduating valve 28 is moved to the right until it uncovers the service port *z*, which leads into passage *h* and chamber *g*, and the application chamber, thus allowing air from the pressure chamber to flow into the application chamber. The pressure thus formed in the application chamber connected with chamber *g*, causes the application piston 10, exhaust valve 16, and application valve 5 to assume the position shown in Fig. 104, "Automatic Service," and apply the brakes.

When the pressure in the pressure chamber falls slightly below that in the brake pipe, equalizing piston 26 moves back carrying with it the graduating valve 28

until the latter closes port *z*, and prevents any further flow of air from the pressure chamber to the application chamber. It is then in "Service Lap" position as shown in Fig. 105.

*Q. How much of a brake pipe service reduction is required to set the brake in full?*

A. About 20 pounds, the same as with a triple valve.

*Q. How is the brake released automatically?*

A. An increase of brake pipe pressure raises that in chamber *p* (Fig. 101) of the distributing valve. This pressure being greater than that in the pressure chamber of the distributing valve forces piston 26, and the parts controlled by this piston, to the left. In this position the pressure from chamber *g* and the application chamber is free to flow through port *h* to the independent brake valve and thence to the automatic brake valve from whence it may escape to the atmosphere when the brake valve handle is in running position.

The escape of the pressure through port *h*, connected with chamber *g*, reduces the pressure in this chamber and permits the greater pressure in chamber *b* to force piston 10 to the left; it in turn draws the parts attached to it to a corresponding position (Fig. 101). In this position brake cylinder pressure escapes to the atmosphere through ports *d* and *e* in the seat of the slide valve 16 and the brakes on the locomotive release.

*Q. How is an automatic emergency application made?*

A. By making a quick, heavy brake pipe reduction, when the equalizing piston 26, with exhaust slide valve 31, and graduating valve 28, will move their full stroke

and open port *h* wide to the application chamber as shown in Fig. 106, permitting full equalization between the pressure chamber and the application chamber, thus applying the brakes with full force.

*Q. What other ports are open to the application chamber in an emergency application?*

A. Port *n*, leading from passage *a* and the main reservoir, is open to the application chamber so that air from the main reservoir can flow into it, and sustain the application chamber pressure against the venting of the air from this chamber through the safety valve.

*Q. How much pressure is obtained in the application chamber and the brake cylinders in an emergency application?*

A. Assuming the brake pipe pressure to be 70 pounds, about 60 pounds is had in the brake cylinder.

*Q. How is this additional 10 pounds obtained?*

A. When the handle of the brake valve is in emergency position the volume of the brake valve equalizing reservoir is added to that of the application chamber, thus increasing the pressure.

*Q. What provision is made to prevent too high a pressure in the brake cylinder?*

A. The safety valve, as shown in Fig. 111, is connected to the distributing valve, and when the pressure becomes higher than its limit of adjustment it opens and vents the surplus air to the atmosphere.

*Q. What is the emergency lap position of the distributing valve?*

A. It is the position shown in Fig. 107 in which the application piston 10 and application valve 5 have moved back far enough after brake cylinder pressure

has equalized with that in the application chamber, to close port *b* and prevent further flow of main reservoir air to the brake cylinder.

*Q. What does Fig. 108 illustrate?*

A. It illustrates the positions of the various valves in the distributing valve after an automatic application and then an independent release have been made.

*Q. In what kind of applications do the equalizing piston 26 and the slide valve 28 and 31 operate?*

A. In all automatic applications of the brake both service and emergency.

*Q. How much pressure can be had in the brake cylinder in a full service application? In an emergency?*

A. When the brake pipe pressure is seventy pounds, about 50 pounds, the same as with the present brake in a service application. In an emergency application the cylinder pressure would approximate 60 pounds.

*Q. Suppose the high-speed brake pressure of 110 pounds is being used, how much will be had in the application chamber in an emergency application?*

A. About 85 pounds; the same will be had in the brake cylinders, and these pressures will gradually be reduced to 60 pounds by the safety valve.

*Q. Is it necessary to break any pipe joints when removing the distributing valve from the double chamber reservoir?*

A. No; all the pipe connections are made to the double chamber reservoir proper.

*Q. Suppose it were desired to remove the application piston, how should this be done?*

A. The application valve cover 3 should first be removed, then the application valve 5 and the application valve pin 18 should be taken out, after which the application cylinder cover can be removed and the application piston taken out for inspection and repairs.

## THE SAFETY VALVE.

*Q. What function does the safety valve shown in Fig. 111 perform?*

A. It performs all the functions of the ordinary brake cylinder relief valve and in addition those of the high-speed reducing valves.

*Q. What are the names of the different parts of this device?*

A. As shown in the illustration they are, 2, Body; 3, Cap Nut; 4, Valve; 5, Valve Stem; 6, Adjusting Spring; 7, Adjusting Nut.

*Q. Of what peculiar style or variety is this valve?*

A. It is known as the pop valve style.

*Q. At what pressure is this valve usually adjusted?*

A. At 53 pounds.

*Q. Explain its operation?*

A. The adjustment of the valve is effected by screwing down the regulating nut 7 until the adjusting spring has sufficient tension to hold valve 4 against the pressure it is desired to retain, after which the cap nut 3 is screwed on firmly in place. When the air pressure acting upward on valve 4 is greater than the adjusting spring can resist, this valve will lift from its seat and allow the surplus air to escape through the six bottom ports in the body 2.

*Q. What is the object of the by-pass port that leads up into the chamber in the body 2 above valve 4?*

A. When valve 4 lifts to relieve pressure it travels far enough to cover the upper end of the by-pass port, thus preventing air in any considerable quantity from passing into the chamber above. When it commences to lower, it increases the opening of this port and allows air to pass freely into this chamber, where it will then form a pressure above valve 4 and cause it to seat promptly. There are two relief ports in the chamber to allow the air remaining therein to escape after valve 4 closes; while valve 4 uncovers the upper end of this by-pass port the two relief ports can not allow the air to escape so fast but what pressure will be formed in the chamber in the valve body.

## FEED VALVES.

### THE B-4 FEED VALVE.

*Q. What is Fig. 119?*

A. It is a photographic view of the exterior of the feed valve, used with the E T equipment, to regulate the pressure in the brake pipe when the handle of the automatic brake valve is in running or in holding position.

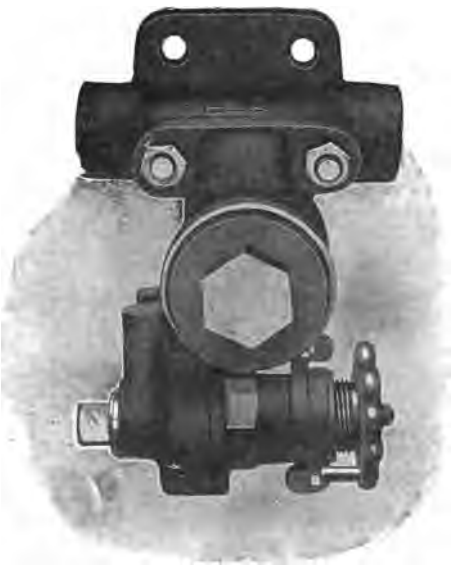

Fig. 119.—B-4 FEED VALVE.

*Q. How does this feed valve differ from the slide valve feed valve used with the G-6 brake valve?*

A. Its operation is the same except that, by the use of the adjusting wheel it can be adjusted for the pressure desired. For description of its operation see G-6 Feed Valve.

*Q. What advantage does this adjusting feature give over that of the older feed valve?*

A. It makes it possible to dispense with one of the two feed valves now used with the high-speed and the high-pressure control brakes, also the reversing cock bracket.

*Q. How is the adjustment of the B-4 feed valve effected?*

A. By turning the adjusting handle in one direction until the lug on it strikes the lower stop the valve will maintain 70 pounds brake pipe pressure and by turning it in the other direction until the lug strikes the upper stop, it will maintain 110 pounds brake pipe pressure.

*Q. If any other pressures than the above are desired, what must be done?*

A. The positions of the stops must be changed.

### THE B-3 REDUCING VALVE.

*Q. What kind of a reducing valve is used with the E T equipment?*

A. It is known as the B-3 and is practically the same as the B-4 and G-6 except that it does not have the adjusting wheel of the former. For a description of its operation see G-6 Feed Valve.

*Q. At what pressure is it adjusted?*

A. At 45 pounds.

*Q. To what does this pressure reducing valve supply air?*

A. It supplies both the independent brake valve and the train air signal.

## THE S F-4 PUMP GOVERNOR.

*Q. What is represented in Fig. 120?*

A. The new pump governor, used with both present standard equipment and the new E T equipment.

*Q. In what respect does this type of duplex governor differ from the present standard?*

A. In design one of the pressure tops has two air connections and an excess pressure regulating spring; in operation it automatically maintains the excess pressure, for which it is adjusted, regardless of what the brake pipe pressure may be.

*Q. At what point is the additional air connection made?*

A. To the side of the upper portion above the air diaphragm 28 to the spring case.

*Q. What is this air connection called?*

A. The feed valve pipe connection.

*Q. What pressure is always in the excess pressure top and the feed valve connection?*

A. Maximum brake pipe pressure.

*Q. To what pressure is the other pressure top connected?*

A. To the main reservoir pressure direct.

*Q. Explain the operation of this governor.*

A. The connection marked *A B V* has main reservoir air flowing through it into the excess pressure top under the air diaphragm 28, when the handle of the automatic brake valve is in release, running, or holding position; and the connection marked *F V P* has air at maximum brake pipe pressure flowing

through it to the spring case above the air diaphragm regardless of the position of the brake valve handle. Assuming that the tension on the excess pressure spring 27 is such that it requires an excess pressure

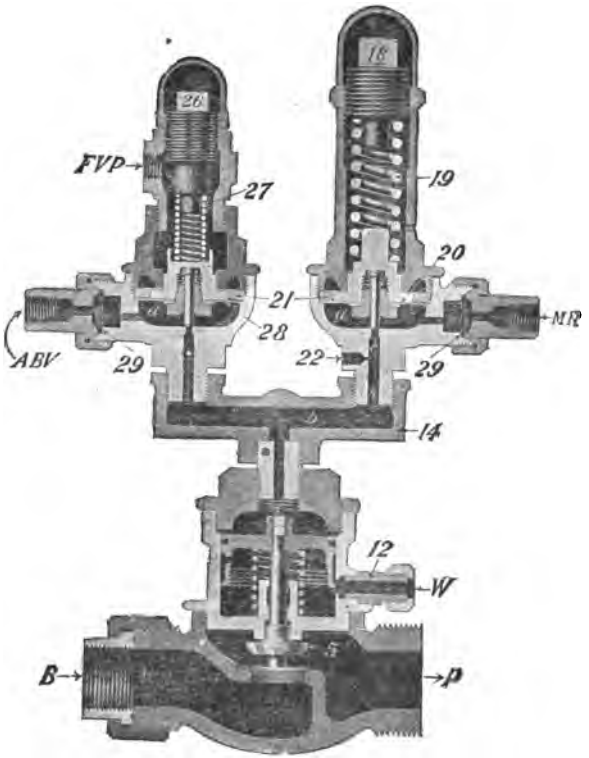


Fig. 120.—(S.F.-4) EXCESS PRESSURE GOVERNOR.

of say 20 pounds beneath the diaphragm to raise it against the air pressure bearing down upon it from above, hence the main reservoir pressure must be 20 pounds in excess of that in the feed valve pipe be-

fore the diaphragm can be lifted and the pump stopped.

If the handle of the automatic brake valve is moved to service application position the communication between the main reservoir and chamber *d* of excess pressure top is cut off so that the pressure above the diaphragm will hold it down with the pin valve on its seat; this top cannot then control the pump. The pump will now work until the main reservoir pressure reaches that for which the main reservoir top at the right is adjusted, say 130 pounds, when this top will operate in the usual manner and stop the pump.

When the handle is moved to release, running or holding position, main reservoir air may again flow to the excess pressure top to chamber *d* under the diaphragm. When the brake pipe pressure is restored to the maximum for which the feed valve is adjusted, and the handle of the brake valve is either in running or in holding position, the pump can work until the main reservoir has accumulated the proper excess, when the excess pressure top will operate and stop the pump.

*Q. In the piping diaphragm, Fig. 97, there is shown, placed in the main reservoir pipe, a cut-out cock. At what point with relation to this cock is the main reservoir pressure top connected to the main reservoir?*

A. It is connected between this cut-out cock and the main reservoir.

*Q. Why is it so located?*

A. So that in case it is necessary to close the cut-out cock to make repairs to any other part of the equipment, the main reservoir pressure top can still control the pump, and prevent it from pumping up an excessively high main reservoir pressure.

*Q. What happens when this cut-out is closed?*

A. A port is so arranged that the air in the main reservoir pipe and brake pipe is vented to the atmosphere, resulting in an application of the brake. If the engineer fails to open the cock the brakes will not release and the train cannot be started.

*Q. Aside from the excess pressure top and its air connection is the S F-4 pump governor the same in construction, design and operation as the older standard duplex pump governor?*

A. Yes, just the same.

*Q. Should care be exercised to keep all air connections tight and all ports in and around the governor open?*

A. In order to get satisfactory results all the pipe connections should be maintained perfectly tight and free from leakage, and all the vent ports should be kept open.

*Q. If any of the pipe connections should leak, what would be the result?*

A. A waste of air, the amount depending on the size of the leaks.

*Q. How is the S F-4 pump governor adjusted to maintain the proper excess pressure?*

A. By removing the cap nut on the excess pressure top, and screwing down on the regulating screw 26 to increase excess pressure; and by screwing up on this screw to reduce it.

## DEFECTS OF "ET" EQUIPMENT.

*Q. If the application chamber pipe should leak at any of its connections between the distributing valve and the independent brake valve what would be the effect?*

A. It would cause the brakes to leak off both in automatic service and in independent brake applications.

*Q. If the pipe connection between the independent and the automatic brake valves should leak what would be the effect?*

A. The brake would leak off in automatic service applications, but not in independent brake applications.

*Q. Suppose the double heading pipe should leak at any of its connections between the distributing valve and the double cock what would be the effect?*

A. When an independent brake application was made and the handle of the independent brake valve was lapped, this leak would permit the brakes to gradually release; in the automatic application it would make no difference, but when a release of an automatic application of the train brake was made it would gradually destroy the holding feature of the automatic brake valve.

*Q. If there should be a leak through the rotary of the independent brake valve what would be the effect?*

A. While both brakes are released and both brake valves are in running position it will cause a slight blow at the emergency exhaust port of the automatic brake valve. When either the automatic or the independent brake is applied in partial service, it will cause a building up of pressure in the application chamber to the maximum adjustment of the pressure reducing valve, and hence cause the brakes to apply with full independent pressure. It will also cause a building up of pressure in the application chamber, while the handle of the automatic brake valve is in release or in holding positions.

*Q. If the main reservoir connection to the distributing valve should leak what would be the effect?*

A. It would make no difference with the operation of the distributing valve, but it would make the pump work harder to supply the leak.

*Q. If the application valve 5 should leak what would be the effect, and how could the leak be detected?*

A. It would increase brake cylinder pressure above that in the application chamber, and force the application piston and application valve back far enough to allow the surplus air to escape at the brake cylinder exhaust port. The leaky valve would be detected by the escape of brake cylinder air at the exhaust port during a brake application.

*Q. Would this be true if there were leakage in the brake cylinders at the same time?*

A. That would depend on whether the leakage from the brake cylinders was greater or less than that through the application valve. If greater, there would be no escape of air at the brake cylinder exhaust port; if less, there would be.

*Q. If the graduating spring 20 (Fig. 110) should break what would be the effect?*

A. The application piston and valve would be less sensitive in graduating.

*Q. If the exhaust valve 16 should leak how could it be known?*

A. By a blow from the brake cylinder exhaust port while the brakes are applied.

*Q. How would a leaky packing leather and packing ring in the application piston affect the operation of the distributing valve in brake applications?*

A. It would tend to reduce the efficiency of the valve in maintaining any cylinder leakage.

*Q. If equalizing slide valve 31 should leak, what effect would it produce?*

A. When brakes are released and both brake valves are in running position, there would be a slight blow at the emergency exhaust port of the automatic brake valve. If the independent brake were applied there would be an increase in application chamber pressure which would cause the brakes to go on harder. If the automatic brake is applied in partial service, then application chamber pressure would increase and the brakes go on harder to the limit of full equalization, if ordinary pressure is used; or if high-speed pressure is used, until the safety valve would open and relieve the application chamber.

*Q. Suppose the engine having the leaky equalizing slide valve were second in a double header what might happen then?*

A. The brakes might entirely release, if the application were a partial service.

*Q. Suppose the graduating valve 28 should leak, what would be the effect?*

A. In release position no effect would be observed. In partial service application the effect would be the same practically as stated for a leaky slide valve 31.

# THE "K" TRIPLE VALVE.

FOR ILLUSTRATIONS SEE PLATE XIV.

*Q. What does Fig. 121 illustrate?*

A. Fig. 121 illustrates the improved *K* triple valve which is now superseding the former quick-action triple valve.

*Q. Does this triple valve differ any in principle of operation from the old standard valve?*

A. No; it operates on the same principle, that is, a reduction of brake pipe pressure causes the brake to apply and an increase of brake pipe pressure causes it to release.

*Q. What are the important advantages of the improved valve over the old?*

A. With the improved valve a portion of the brake pipe air is vented to the brake cylinder in each service application; this causes a quicker fall of pressure in the brake pipe throughout the train and hence a quicker serial application of the brakes than is now obtained with the older form of triple. In the release of the brakes on long trains those on the front portion may be held applied until those in the rear have been released; this action causes the slack to settle in instead of stretching out, which latter action tends to break the train in two. There is also a retarded recharge feature by means of which the recharge at the head end is slowed up. This makes available a greater amount of air with which to release and recharge the brakes at the rear of the train; it also does away with the over-

E 66

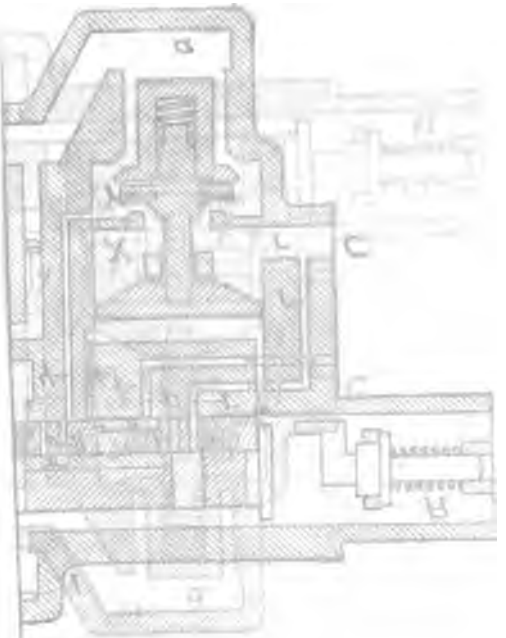


Fig. 136.

LIBRARY
OF THE
UNIVERSITY
OF
CALIFORNIA

charge of the auxiliary reservoirs at the front of the train, which overcharge usually results in the reapplication of the brakes near the engine when the brake valve handle is moved to running position. The reapplication wastes air and overheats wheels because of extra amount of work performed.

*Q. What other advantages are obtained with the K triple?*

A. There is a large saving in the quantity of air used which results in less pump labor, the brakes apply more uniformly and with greater certainty on the longest trains and with any service reduction desired. In heavy grade work there is much less chance for the engineer to "lose his air" and of the train running away in consequence.

*Q. In the emergency application of the brake is there any advantage of the new triple valve over the old?*

A. The emergency feature of the triple has not been changed and the results that can be obtained with these valves are practically identical.

*Q. In service application using a brake pipe pressure of 70 pounds, how much reduction is necessary to set the brakes in full?*

A. About 17 pounds, 3 pounds less than with the standard triple.

*Q. Will these triples give satisfactory results in braking when intermingled in any considerable number with the older triples?*

A. Yes, and on long trains they will very materially improve the action of the older triple.

*Q. What does Fig. 122 represent?*

A. It is a vertical cross section of the *K* triple representing the interior construction.

*Q. What are the names of the different parts of the K triple as numbered on this cut?*

A. 2, Valve Body; 3, Slide Valve; 4, Main Piston; 5, Main-Piston Packing Ring; 6, Slide-Valve Spring; 7, Graduating Valve; 8, Emergency Piston; 9 Emergency-Valve Seat; 10, Emergency Valve; 11, Emergency-Valve Rubber Seat; 12, Check-Valve Spring; 13, Check-Valve Case; 14, Check-Valve Case Gasket; 15, Check Valve; 16, Air Strainer; 17, Union Nut; 18, Union Swivel; 19, Cylinder Cap; 20, Graduating-Stem Nut; 21, Graduating Stem; 22, Graduating Spring; 23, Cylinder-Cap Gasket; 24, Bolt and Nut; 25, Cap Screw; 26, Drain Plug; 27, Union Gasket; 28, Emergency-Valve Nut; 29, Retarded-Release Stem; 32, Retarded-Release Spring Collar; 33, Retarded-Release Spring; 34, Retarded-Release Stem Pin; 35, Graduating-Valve Spring.

*Q. What is represented in Fig. 123?*

A. A face view of the graduating valve, a face view and a top view of the slide valve, and a view of the slide valve bush, with their ports, cavities, etc., arranged as actually constructed.

*Q. What is represented in Figs. 124 to 128 inclusive?*

A. These figures are diagrammatic drawings intended to show clearly the relation of the various ports and passages in the different operative positions of the valve.

*Q. Explain the operation of the triple as shown in Fig. 124.*

A. Full release position is shown in Fig. 124. Brake pipe air enters the triple body at the connection marked *BP*, passes upward through passage *a*, *e*, *f* and *g* to chamber *h*, thence through the feed groove *i* past the triple piston into chamber *R* and out to the auxiliary reservoir. Brake pipe air also flows past the non-return check valve, from chamber *a* into chamber *Y*, thence through passage *y* in the body and port *j* in the slide valve to chamber *R* and the auxiliary reservoir. In this way the auxiliary reservoir is charged up equal to the pressure in the brake pipe. The slide valve is shown in this figure with its exhaust cavity *n* uncovering wide the exhaust port in the slide valve seat leading from the brake cylinder to the atmosphere, providing for the release of the brake through port *r*, cavity *n*, and port *p*.

*Q. What is shown in Fig. 125?*

A. In this figure, the parts of the *K* triple are represented in the service position, the position they assume while a service reduction in brake pipe pressure is being made.

*Q. Explain the operation in service position.*

A. The triple piston, as shown, has moved toward the left until it touches the graduating stem, and it has carried with it the main slide and the graduating slide valves. Port *z* in the main slide valve registers with port *r* in its seat. Port *z* is uncovered by the graduating valve so that air is free to flow from the auxiliary reservoir to the brake cylinder. At the same time passage *y* and port *o* are in register, and cavity *v* in the graduating valve spans port *o* and *q*. Port *q* is in register with port *t* leading around the loosely fitting piston to chamber *x* and the brake cylinder. Hence, arranged as shown, these ports permit brake pipe air to flow into the

brake cylinder at the same time that the auxiliary is supplying air.

*Q. What does Fig. 126 represent?*

A. It shows the triple valve in what is termed the Service Lap position.

*Q. When does the triple valve assume this position?*

A. When the pressure in the auxiliary falls slightly below that remaining in the brake pipe. As shown in this figure the triple piston has moved the graduating valve back far enough to close ports *o*, *q*, and *z*, and thus prevent further flow of air from both the auxiliary and the brake pipe to the brake cylinder. It will be noted in the figure that the main slide valve is ahead of its position shown in Fig. 125. The valve would only assume this position if the brake pipe pressure were reduced faster than the auxiliary reservoir pressure could reduce to the brake cylinder, otherwise port *o* would remain in register with port *y* as in Fig. 125, but the graduating valve would have closed ports *o* and *z* as shown in Fig. 126.

*Q. What is shown in Fig. 127?*

A. Fig. 127 represents the different parts of the *K* triple in the Retarded Release position.

*Q. How are they made to assume this position?*

A. By admitting main reservoir air to the brake pipe fast enough to increase the pressure considerably above that remaining in the auxiliary reservoir.

*Q. Explain the operation in the retarded release position.*

A. As shown brake pipe pressure forces the triple piston to the extreme right until it strikes against the slide valve bush. When this occurs brake-pipe air cannot feed through charging groove *i* but must pass through passage *y* in the slide valve seat and port *l* in the slide valve to reach the auxiliary reservoir.

The triple piston stem abuts against the retarded release spring and partially compresses it. The slide valve has moved far enough over to bring the restricted port *n* (Fig. 123), the exhaust cavity, over exhaust port *p*, thus reducing very materially the size of this port, causing a slow release of the brake. In a long train this retarded release can, if desired, be obtained about 30 cars back in the train.

*Q. What is it that causes the triple piston to assume the retarded release position?*

A. To cause the piston to assume this position it is necessary to have the pressure on the brake pipe side of the triple piston sufficiently in excess of that in the auxiliary reservoir to permit of the greater pressure acting on the brake pipe side of the piston to compress the retarded release spring. With the usual main reservoir pressure and capacity it is possible to compress this spring on a long train about thirty cars back. The effect of the friction due to the flow of air is to prohibit any rapid rise of brake pipe pressure back in the train but, as already stated, the desired differential between the brake pipe and auxiliary reservoir pressures can be obtained about thirty cars back in a 100-car train.

*Q. What does Fig. 128 represent?*

A. It represents the *K* triple in the Emergency position.

*Q. When does the valve assume this position?*

A. Whenever a heavy, quick reduction in brake pipe pressure is made, as when the brake valve is quickly placed in emergency position or a hose bursts.

*Q. Explain the operation in emergency position.*

A. It is the same as that given for the standard triple. Air is admitted to the top of the emergency piston through the large port *t*. This piston is forced downward, and brake pipe pressure raises the non-return check valve, and flows quickly through ports *r* and *C* to the brake cylinder. At the same time port *s* in the slide valve registers with port *r* so that auxiliary air can flow through this port also to the brake cylinder and will equalize with it.

*Q. How many sizes of the K triple are there?*

A. Two, the *K-1* and *K-2*.

*Q. On what size car equipment is the K-1 triple used? The K-2?*

A. The *K-1* is used on eight-inch freight equipment, and the *K-2* on ten-inch.

*Q. Can a K-1 and a K-2 triple be readily substituted for the older corresponding size of quick-action triple?*

A. Yes, they are perfectly interchangeable on their respective reservoirs.

*Q. On a train of eighty cars will a five-pound service reduction set all the brakes?*

A. Yes, and a 5-pound reduction will be as effective in stopping an empty train from a speed of 20 miles per hour as a 20-pound service reduction with the older triples.

*Q. Explain this.*

A. Because of the venting of brake-pipe air to the brake cylinder, a five-pound initial reduction insures the application of all brakes on the train in a much shorter time then they can be applied with any service reduction with the older triples, and also with a higher pressure than can be obtained from a 5-pound service reduction with the ordinary quick-action triple valve with which on this length of train only a comparatively few brakes will apply.

*Q. Is there any difference in the internal construction of the K-1 and the K-2 triples?*

A. In full release position the charging takes place through the feed port *i* only with the K-1 triple, while a feed port in the piston bush and a port in the slide valve are both used with the K-2 valve.

*Q. As to care and maintenance of the K triple, do the same rules apply as to the old standard triple?*

A. Yes.

# THE CROSS-COMPOUND PUMP.

*Q. Why are larger air compressors necessary in modern railway service?*

A. Because of the increased size and weight of locomotives and cars, requiring larger brake equipment, and of the increased number of cars hauled in single trains.

*Q. What is the type of air pump shown in Fig. 129?*

A. It is called the 8½-inch cross-compound pump, and the drawing illustrates its exterior.

*Q. How many cylinders has the cross-compound pump, and what are they called?*

A. It has four cylinders, two steam and two air.

*Q. Why is this pump named compound?*

A. Because in the steam end it uses the steam expansively in two cylinders, and in the air end it compounds the air in compression.

*Q. Is this type of pump more economical in the use of steam than the familiar types which have already been described?*

A. Yes, it is more economical in steam consumption, using less than one third the steam required by the 9½-inch pump to compress the same quantity of air.

*Q. In general design and construction, how does it compare with the 9½-inch and 11-inch pumps?*

A. With the exception of the number of cylinders and the type of main slide valve, it is of the same general plan,

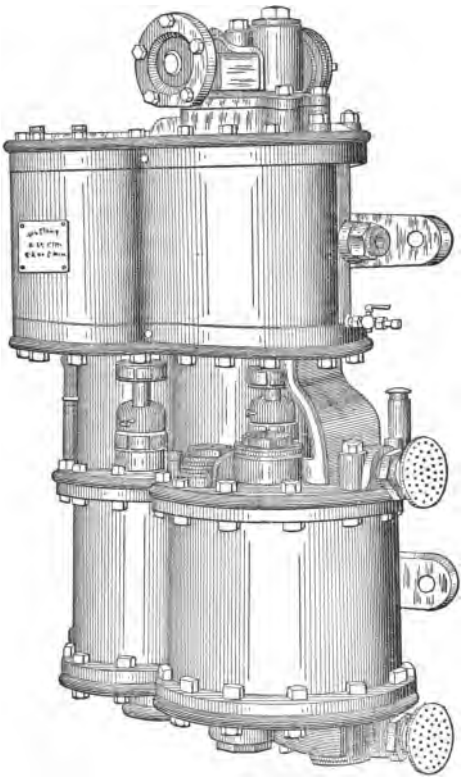

Fig. 129.—8½-INCH CROSS-COMPOUND PUMP.

*Q. Which are the steam cylinders and which are the air?*

A. The two upper cylinders are the steam and the two lower the air, this arrangement being the same as that of the other Westinghouse pumps.

*Q. What are the diameters of the respective cylinders?*

A. The smaller steam cylinder is 8½ inches, the larger is 14½ inches, in diameter; the smaller air cylinder is 9 inches, and the larger 14½ inches in diameter.

*Q. What names are used to distinguish these cylinders?*

A. The smaller cylinders are called the high-pressure steam and the high-pressure air, while the larger ones are called the low-pressure steam and the low-pressure air.

*Q. How are the high and the low-pressure cylinders arranged with respect to each other?*

A. The high-pressure steam cylinder is above the low-pressure air cylinder, and the low-pressure steam is above the high-pressure air cylinder.

*Q. What type of reversing valve gear is employed in this pump?*

A. The same as in the 9½-inch and the 11-inch pumps.

*Q. Does it operate the same?*

A. Practically the same.

*Q. How are the pistons and the rods connected?*

A. The high-pressure steam and the low-pressure air pistons are connected by one piston rod, and the low-pressure steam and the high-pressure air pistons are connected by the other.

*Q. How many air valves has the pump, and what are they called?*

A. It has six valves, and they are called the receiving, the intermediate discharge, and the final-discharge valves, two of each.

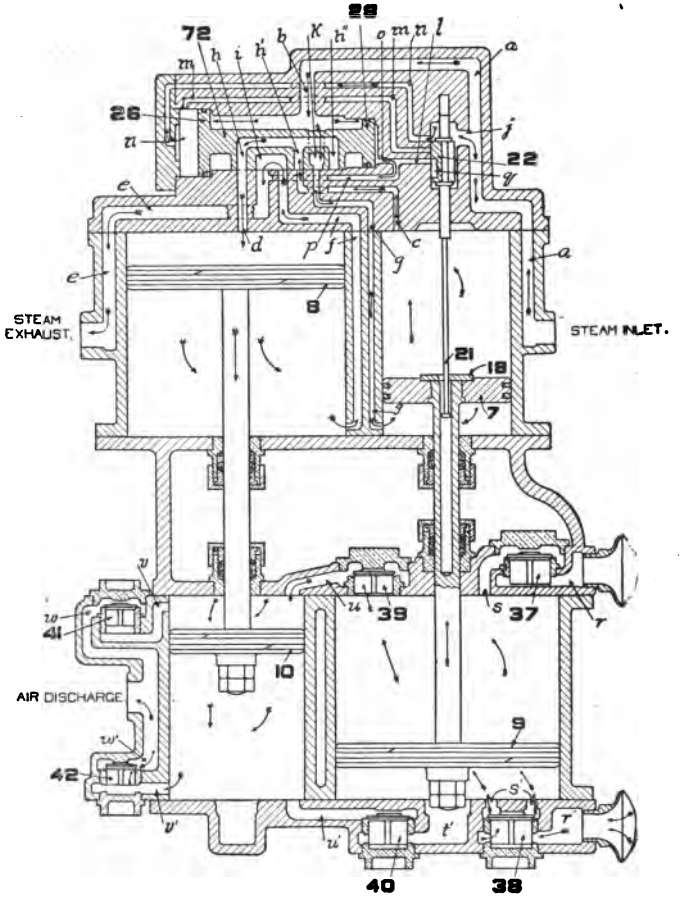


Fig. 130.

DIAGRAM OF CROSS-COMPOUND PUMP. UP STROKE HIGH-PRESSURE SIDE.

*Q. How many air strainers has the pump?*

A. Two, one for the upper receiving valve and one for the lower.

*Q. In which air cylinder are the air-receiving valves located?*

A. In the low-pressure air cylinder.

*Q. Where are the intermediate air-discharge valves located?*

A. They are located between the low-pressure and the high-pressure air cylinders.

*Q. Where are the final discharge valves located?*

A. They are located in the ends of the high-pressure air cylinder.

*Q. What is the difference between the main slide valve in the cross-compound and the ordinary D slide valve of the 9½-inch pump?*

A. The main slide valve in the cross-compound is longer than that in the 9½-inch pump, and besides the usual exhaust cavity, it contains four elongated steam ports in its face.

*Q. What are Figs. 130 and 131, and what do they show?*

A. They are diagrammatic drawings of the cross-compound pump, and show the various ports and passages and the relative positions of the various parts on the up-stroke and the down-stroke of the pistons.

*Q. Explain the operation in the steam end on the up-stroke of the high-pressure steam piston?*

A. Referring to Fig. 130, steam from the boiler enters the pump at the point marked "steam inlet," flows through passage *a* to the top head and fills the

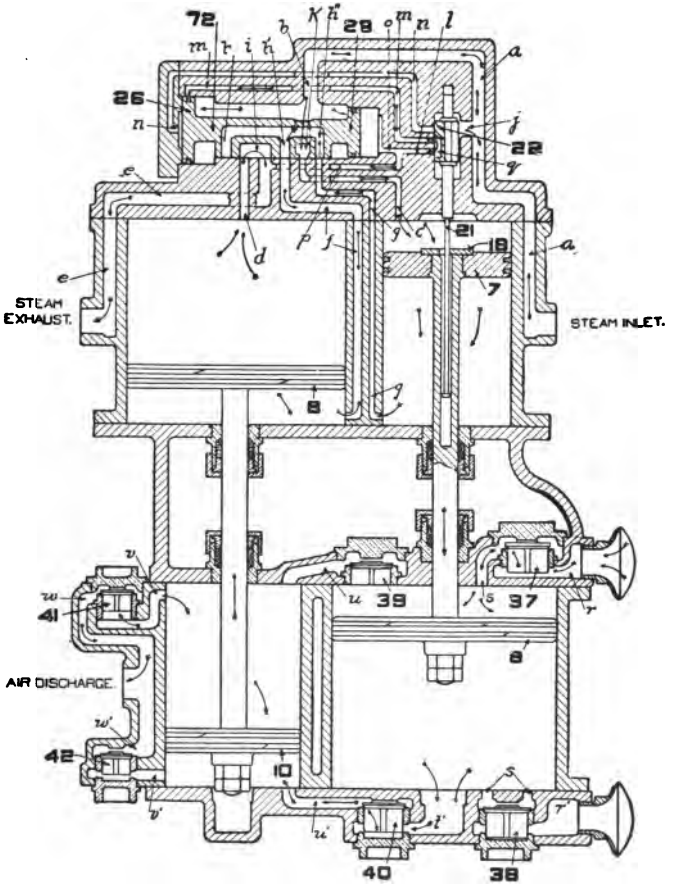


Fig. 131.

DIAGRAM OF CROSS-COMPOUND PUMP. DOWN STROKE, HIGH-PRESSURE SIDE.

main slide-valve chamber between the pistons 26 and 28 of the main reversing valve. It also flows through port *j* to the reversing slide-valve chamber, and through passage *n*, leading from this chamber to the chamber behind the larger main reversing piston 26, forcing the reversing valve 72 to the right to the position shown. This brings port *k* in the slide valve in register with port and passage *g* leading to the lower end of the high-pressure steam cylinders, thus providing for the admission of live steam under the high-pressure steam piston 7, starting it on its upward stroke.

*Q. Where does the steam go that was used in the high-pressure steam cylinder on the previous down stroke?*

A. Port *c* in the slide valve seat, which leads into the upper end of the high-pressure steam cylinder, is in register with port and passage *h* in the slide-valve seat, and this port and passage registers with port *d* in its seat, which leads into the upper end of the low-pressure cylinder, thus the steam from above the high-pressure piston exhausts through port *c*, port and passage *h'*, *h*, and port *d* into the upper end of the low-pressure steam cylinder, and drives the low-pressure piston on its down stroke.

*Q. Do the low-pressure pistons make their down stroke as the high-pressure pistons make their up strokes?*

A. Yes, and *vice versa*, as the low-pressure pistons make their up stroke the high-pressure pistons make their down stroke.

*Q. How is the stroke of the steam pistons reversed?*

A. When the high-pressure steam piston approaches close to the upper end of its cylinder, the

tappet plate engages the shoulder on the reversing valve rod 21, forces this rod and the reversing slide valve 22, which is attached to it, upward to the position shown in Fig. 131. The reversing slide valve 22 in this position connects the chamber behind piston 26 and passage *m*, through its exhaust cavity, with passage *l* and the exhaust to the atmosphere. With the steam pressure removed from behind piston 26 the steam pressure on the other side forces it and slide valve 72, which it controls, to the left. In the position shown, live steam enters the upper end of the high-pressure steam cylinder through port *k* in the slide valve and port *c* in its seat, thus causing the high-pressure steam piston to start on its down stroke. At the same time the high-pressure steam piston starts on its down stroke, the steam in the lower end of the high-pressure steam cylinder exhausts through port and passage *g* in the slide-valve seat, port *h''* in the slide valve, and port and passage *f* leading to the lower end of the low-pressure steam cylinder and starts the low-pressure piston on its up stroke.

*Q. Explain the operation in the air end.*

A. Commencing with the low-pressure air cylinder it will be seen that as the low-pressure air piston is making its up stroke, it tends to form a vacuum behind it and the atmospheric pressure raises the lower air-inlet valve 38 and air flows into the cylinder past this valve, to fill the partial vacuum formed by the moving air piston. The air contained in the cylinder above the piston is compressed, as the piston advances, and is forced through the intermediate air-discharge valve 39 into the upper end of the high-pressure air cylinder above the high-pressure piston 10. Upper air-inlet valve 37 is forced to its seat during the up stroke of the low-pressure piston, thus preventing the escape of any air back to the atmos-

phere. The air compressed by piston 9 on its up stroke is forced into the chamber above piston 10 and aids the steam acting downward on piston 8 to force pistons 8 and 10 downward.

On the down stroke of the high-pressure air piston 10, the air under it which was previously forced into this cylinder by the low-pressure air piston on its down stroke, is compressed to main reservoir pressure and forced out through the lower final discharge valve 42 to the air discharge pipe and the main reservoir.

On the down stroke of the low-pressure and the up stroke of the high-pressure air pistons, the operations just explained are repeated, only the air is drawn in from the atmosphere through the upper discharge valve 37, and is discharged through lower intermediate-discharge valve 40 into the lower end of the high-pressure air cylinder, and is discharged to the main reservoir through the upper final-discharge valve 41 into the air discharge pipe and main reservoir.

*Q. What maximum pressure does the low-pressure air piston work against?*

A. About 40 pounds.

*Q. What maximum pressure does the high-pressure air piston work against?*

A. Main reservoir pressure, whatever it may be.

*Q. How does the capacity of the cross-compound pump compare with that of the other air pumps?*

A. When working with 200 pounds of steam pressure, against a main reservoir pressure of 130 pounds it has nearly three and one-half times the capacity of the 9½-inch pump, two and three-tenths the capacity of the 11-inch pump, one and eight-tenths the capacity

of the tandem compound pump, and one and one-half times the capacity of the New York No. 5 duplex pump.

*Q. Why is it that the air capacity of this pump is so much greater than that of any of the others?*

A. Making due allowance for its size, its greater capacity and efficiency is due to its design which has cut down the clearance ratio to almost nothing, and because the air pistons have less difference of pressure on their two sides to work against, hence there is less packing ring leakage encountered, and the pump runs cooler.

*Q. Is the low-pressure steam piston rod solid or hollow?*

A. It is solid, and this piston, together with the high-pressure air pistons, is called a floating piston.

*Q. Why are they called floating pistons?*

A. They perform no part in reversing the pump.

*Q. About how many cycles per minute should the pump speed be?*

A. About 65, and with 200 pounds of steam pressure it cannot be made to run any faster.

*Q. Then the pump cannot be raced?*

A. No, not even against a comparatively low air pressure, and it is practically impossible to create conditions which will result in any pounding.

*Q. How should it be started, drained, and lubricated?*

A. The same general rules given for the other pumps apply in operating the compound.

# THE No. 6 ET LOCOMOTIVE BRAKE EQUIPMENT.

*Q. What is the No. 6 ET Locomotive Equipment?*

A. It is the latest development of the *ET* equipment, being a modification of the No. 5 equipment (described on page 307), to accomplish the same results by similar means, and make the manipulation of this new type of locomotive equipment exactly correspond in all respects to that of the old standard.

*Q. In what way does the manipulation of the No. 6 equipment differ from that of the No. 5?*

A. When second in double heading, or a helper, the engineer closes the cut-out cock in the brake pipe under the brake valve (now called the "double-heading cock") and leaves the handle of the automatic brake valve in *running* position with the No. 6 equipment; while with the No. 5 equipment, as already stated, he moves that handle to *lap.*

*Q. In applying and releasing the brakes, is there any difference in the manipulation of the two equipments?*

A. None whatever.

*Q. Is there any difference in the principal parts of the equipment?*

A. The double cut-out cock under the automatic brake valve is eliminated in the No. 6 equipment, being replaced by an ordinary cut-out cock such as is used in

the old standard equipment. This cock is now called the "double-heading cock," since it is only used when an engine is second in double heading, or a helper, or is a dead engine.

*Q. How does the piping of the No. 6 equipment differ from that of the No. 5?*

A. The double-heading pipe is replaced by the "distributing-valve release pipe," which connects the equalizing-valve exhaust port of the distributing valve with the automatic brake valve through the independent brake valve. The application chamber pipe is now called the "application *cylinder* pipe," and branches, one branch going to each brake valve. (See Fig. 132.) The main-reservoir pipe connection to the distributing valve is ¾-inch pipe. The branch pipe from the brake pipe to the distributing valve is ¾-inch pipe. The dead-engine bypass connection is made a regular part of the equipment. The single-pointer air gage is replaced by a small duplex air gage, the red hand of which indicates brake-cylinder pressure, and the black hand is connected to the brake pipe below the double-heading cock and shows brake-pipe pressure at all times, even when the double-heading cock is closed.

*Q. What is the object of this last-mentioned gage connection to the brake-pipe below the double-heading cock?*

A. It enables an engineer when double-heading to see what the head engineer is doing with the brakes.

*Q. If a pump should break down on a second engine equipped with the No. 6 equipment, what should the engineer do?*

A. He should open the cut-out cock in the dead engine bypass connection which would allow the main reservoir to charge up from the brake pipe.

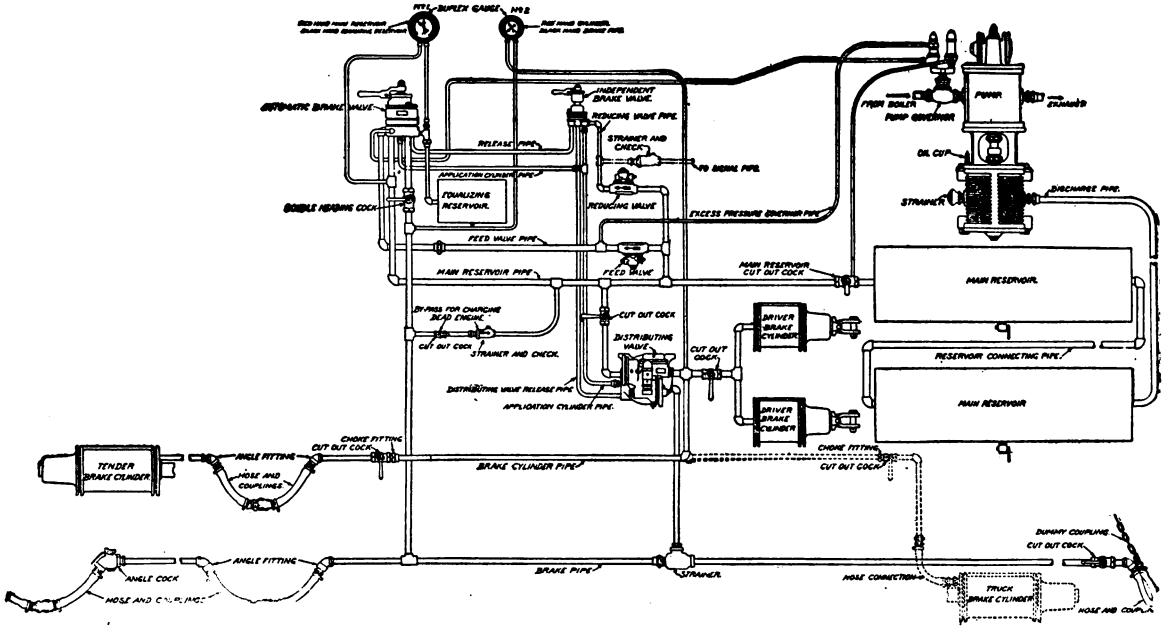


FIG. 132.—PIPING DIAGRAM OF THE NO. 6 E T LOCOMOTIVE BRAKE EQUIPMENT.

*Q. What special adjustment is necessary on a dead engine?*

A. The safety valve on the distributing valve should have its adjustment reduced to 25 pounds, thus limiting the brake-cylinder pressure to this amount.

*Q. What is the dead-engine bypass connection?*

A. It is a bypass by means of which the main reservoirs can be charged through a cut-out cock and a combined air strainer and check valve, the latter having a choke which regulates the flow of air from the brake pipe at a speed such that the air taken from it would not act to apply the train brakes while the main reservoirs are charging. The check valve prevents air flowing back to the brake pipe when a reduction is made to apply the brakes, and the strainer prevents dirt from lodging in the check valve and causing it to leak. The cut-out cock must be closed when this connection is not being used, and the double-heading cock should be closed when it is being used.

*Q. What automatic brake valve is used with the No. 6 equipment?*

A. The H-6 automatic brake valve.

*Q. How does it differ from the H-5 brake valve?*

A. Principally in the arrangement of ports in rotary valve and seat. The warning port blows feed-valve-pipe air (not main-reservoir air) to the atmosphere. In emergency applications, the equalizing reservoir is not connected to the distributing valve, but drains to the atmosphere; while main-reservoir air feeds into the application-cylinder pipe and thence to the distributing valve to maintain the high brake-cylinder pressure.

*Q. Is any higher brake-cylinder pressure obtained in emergency with the No. 6 equipment than with the No. 5?*

A. Yes; a little over 8 per cent. more.

*Q. What independent brake valve is used with the No. 6 equipment?*

A. The S-6 independent brake valve.

*Q. How does it differ from the SF brake valve?*

A. It is very different both in construction and arrangement of ports. It has four pipe connections instead of three. But in operation, it is exactly the same.

*Q. What distributing valve is used with the No. 6 equipment?*

A. The No. 6 distributing valve.

*Q. In what way does it differ from the No. 5 distributing valve?*

A. The application cylinder and application chamber are not directly connected, except through ports in the equalizing slide valve and seat; the application-cylinder pipe connects with the application cylinder, and not with the application chamber, unless the equalizing slide valve is in a position that connects the two; in emergency applications, the pressure chamber equalizes with the application cylinder only, thus obtaining a much higher pressure of equalization. The port connecting main-reservoir pressure with the equalizing slide-valve seat is eliminated, the feed up in emergency now taking place through the automatic brake valve and application-cylinder pipe. The safety valve is set for 68 pounds. Provision is made for the application of a "quick-action cap" to the equalizing portion, which cap contains a slide valve and check valve which

operate in emergency exactly like the quick-action parts of a quick-action triple valve. The position of the two brake-valve connections to the distributing valve is reversed. The arrangement of ports in equalizing slide valve and seat is different. The supply valve is of slightly different construction. A graduating spring and sleeve is added to the equalizing portion. A drain cock is added to the bottom of the distributing valve whereby all precipated moisture may be drained. The arrangement of ports in the end of the double-chamber reservoir is different, so that a No. 5 distributing valve cannot be used on a No. 6 reservoir, and *vice versa.*

*Q. How does the No. 6 distributing valve respond to brake-pipe reductions?*

A. It responds to brake-pipe reductions in quite the same manner as the No. 5 valve, so that, outside of the higher emergency brake-cylinder pressure, an engineer could not tell from the cab which distributing valve was installed.

*Q. Are there any other changes in the No. 6 equipment?*

A. No; all other parts of the two equipments are practically the same.

# INDEX.

**See also index to Appendix pages 379 and 380


PAGE

Air brake and hand brake working opposite ...63 to 65
Air brake and hand brake working together....63 to 65
Air brake applied, reversing engine .....261, 264, 265
Air brake, definition..... 17
Air expansion, to calculate, 296, 297
Air brake, invention.17, 18, 35
Air brake, plain automatic.18, 19
Air brake, plain automatic, car equipment ..... 21
Air brake, quick-action.... 19
Air brake recording gauges, 229 to 233
Connection ..... 220
Horizontal type ..... 233
Object sought ..... 230
Operation ..... 229
Revolving type ..... 233
Speed of .....230 to 232
Air brake, straight.....17, 18
Air brake, to apply..... 29
Air brake, to release..... 31
Air brake versus hand brakes 253
Air gauge, incorrect..... 117
Air hose and specifications, 291 to 294
Freight hose ..... 291
Passenger hose ..... 291
Signal hose ..... 291
Porous hose ..... 292
Use of marking..... 292
Air pumps. See Pumps.
Air valve lift, 8-inch..... 145
Air valve lift, 9½-inch..... 142
American brake leverage, 288 to 290
American brake-slack adjuster .....66 to 73
Angle cock closed ..... 246
Appliances and methods of testing triple valves.217 to 227
Area of piston, to calculate. 296
Automatic and straight-air brake. See Combined Automatic and Straight-air.
Auxiliary reservoir, charging. 27
Auxiliary reservoir, how to charge .....27, 31, 32
Auxiliary reservoir leak.... 45
Auxiliary reservoir not charging ..... 238
Auxiliary reservoir, will not charge .....40, 41

BEGINNINGS of the air brake, 17 to 20

PAGE

Blow at exhaust of triple valve ..... 241
Blow at train line exhaust. 249
Blow out train line ..... 235
Broken graduating spring.42, 43
Brake application, meaning.. 256
Brake, full set ..... 30
Brake leaking off..... 238
Brake not applied ..... 238
Brake, not apply.....40, 41
Brake tests .....261 to 267
Brake valves, different kinds 90
D 8, emergency position. 124
D 8, high main reservoir pressure .....128, 129
D 8, how to remove excess pressure valve .. 127
D 8, lap position ..... 121
D 8, no excess ..... 127
D 8, release position.119, 120
D 8, running position... 120
D 8, service position.121-123
D 8, too much or too little excess ..... 128
G 6, emergency position, 99, 100
G 6, lap position....96, 97
G 6, no excess running position .....114 to 116
G 6, parts ..... 91
G 6, positions .....91, 92
G 6, preliminary exhaust port closed ..... 117
G 6, release position.92 to 94
G 6, running position.. 95
G 6, service position.97 to 99
G 6, troubles ....114 to 119
Location ..... 90
Leak at train line exhaust .....116, 117
Test for leaking rotary, 115. 116
Comparisons of D 8 and G 6 .....130, 131
Brakes will not apply with brake valve in service position ..... 117
Brakes stuck ..... 259
Braking power and leverage, 271 to 286
Braking power as affected by load ..... 273
Braking power six-wheel trucks ..... 271
Braking power used on drivers .....271, 272
Braking power used on freight car ..... 271

PAGE

Braking power and leverage:
Braking power used on passenger car ..... 271
Braking power used on tenders ..... 272
Cylinder pressure used in figuring braking power 274
Cylinder values, table.. 274
Definition braking power and leverage ..... 271
Figuring braking power. 272
How to design a brake gear .....279 to 283
Lever of first kind or class .....274, 275
Lever of second kind or class ..... 276
Lever of third kind or class ..... 277
Proportion of levers .. 278
To figure percentage of braking power ..... 271
To figure braking power by a short method.285, 286
To find force acting on piston .....272, 273
Braking power lost by heavy reduction .....248, 249
Braking power possible, using retainer ..... 252
Brakes dragging ..... 252
Brakes stuck ..... 251

CAM brake ..... 270
Charge a train .....235, 236
Cleaning slack adjuster.... 73
Closed angle cock..... 246
Combined Automatic and Straight air .....201 to 213
Advantages .....202, 203
Blow at exhaust..... 213
Brake releasing ..... 212
Cause of brake releasing ..... 213
Cleaning brake valve... 213
Directions for using.... 206
Double check valve, operation .....203, 204
How to use ..... 206
Operation ..... 205
Parts employed ..... 203
Piping brake valve.211, 212
Reducing valve ..... 203
Safety valve, duties.... 205
Slide-valve reducing valve ..... 203
Straight-air brake valve, operation .....207 to 211
Troubles, brake valve, 212, 213
Coupling to train .....243, 244
Cutting out car ..... 239
Cylinder lever ..... 55
Cylinder oil plug..... 52
Cylinder release spring weak 240
Cylinder volume, to calculate 296

PAGE

Cylinders to be used on different vehicles ..... 287

D 8 BRAKE valve. See Brake valve.
Dead lever ..... 54
Dirty triple piston.....43, 44
Dirty triple valve strainers. 41
Double heading .....260, 261
Driver brake, cutting out on grade ..... 259
Dry steam for pump ..... 132
Duplex main reservoir regulation .. .....214 to 216
Adjustment of governors 214
Advantages ..... 214
Operation .....214, 216

EMERGENCY after service application ..... 37
Emergency application, cars cut out.....41, 42
Emergency application followed by release.....254, 255
Emergency application on turntable ..... 255
Emergency application, quick-action triple valve..37 to 39
Emergency application, service reduction ..... 240
Emergency application, undesired .....43, 44
Emergency, use of..... 261
Engineer's brake valve. See Brake valve.
Engineer's equalizing reservoir or "little drum", 110 to 113
Equalizing piston, discharges air when releasing ..... 126
Equalizing piston, not sensitive ..... 117
Equalizing piston troubles, D 8 brake valve..... 129
Equalizing reservoir, location ..... 110
Equalizing reservoir, pipe broken .....112, 113
Equalizing reservoir, use.... 110
Excess pressure, its use.... 100
Expansion of air, to calculate .....296, 297

FEED valve, removal..... 109
Feed valve (old style) or train line governor.105 to 109
Defects .....106, 107
Operation ..... 105
Use ..... 105
Feed grooves dirty..... 242
Fibre strain of levers...297, 298
Floating lever ..... 55
Freight equipment, kinds.... 53
Freight equipment, parts and use .....49 to
Full service reduction.....

PAGE

Full service reduction in testing brakes ..... 244

G 6 BRAKE valve. See Brake valves.
Gauge, incorrect ..... 117
Gauge, necessity for watching ..... 253
Gain in braking power..... 200
Graduating spring broken or weak .....42, 43
Graduating valve, leak ..... 48

HAND brakes versus air brakes ..... 253
Hand brake used with air .....258, 259
High pressure control or Schedule U .....197 to 200
Advantages .....197, 198
Object ..... 197
Wheel sliding possibility 197
Effect of light service reductions ..... 200
Operation .....198, 199
Light cars in train.... 199
Reduction to obtain full power ..... 200
Use of safety valves.... 200
High-speed brake....185 to 196
Efficiency .....185 to 195
Best method of using for stops ..... 192
Cleaning ..... 195
Comparison with quick-action ..... 196
Cylinder pressure, service reduction ....190, 192
Oiling ..... 195
Operation of reducing valve .....185, 187, 194
Percentage of braking power used ..... 185
Principles involved .... 186
Quick service application 192
Reducing valve operation ..... 186
Special advantages .... 194
Hodge lever ..... 55
Hose lining loose..... 245
Hose, pulling apart..... 260
Hose specifications...292 to 294
Hose specifications. See Air hose specifications.
Hose. See Air hose and Specifications.
How to conduct train test.. 234

INITIAL reduction, using retainers ..... 252
Initial reduction .....246, 247

LEAK by graduating valve.. 48
Leak in auxiliary reservoir. 45
Leak in emergency valve rubber seat.....46, 47

PAGE

Leak in train line..... 45
Leakage test of train line .....245, 246
Leaks in train line..237 to 239
Leaks in triple valve..... 45
Leaving train on grade..... 259
Levers, cylinder ..... 55
Lever, dead ..... 54
Lever, floating ..... 55
Lever, Hodge ..... 55
Lever, live ..... 54
Lever, piston ..... 54
Levers, to calculate size of. 297
Little drum, location..... 110
Little drum, pipe broken.... 112
Little drum, 20-pound reduction ..... 113
Little drum pressure feeding up on lap ..... 253
Little drum, use ..... 110
Live lever ..... 54
Location of throttle and governor ..... 133
Loose packing rings ..... 142
Loss of braking power..... 248
Lubricants ..... 228

MAIN Reservoir .....84 to 88
Advantages if large.... 86
Bad effects if too small. 85
Capacity recommended, 84, 85, 88
Draining ..... 87
Location .....86, 87
Object ..... 84
Pressure carried ..... 84
Use of two ..... 87
Water in it ..... 87

NECESSITY for watching gauge ..... 253
Necessity for testing train.. 244
Nine and one-half inch pump. See Pumps.
Nine and one-half inch pump, right and left hand. See Pumps.

OIL plug, cylinder ..... 52
Old style feed valve. See Feed valve (old style) or train line governor.
Outside equalized brake, 288 to 290

PARTS and use, freight equipment .....49 to 53
Passenger train, releasing brakes ..... 256
Passenger train stops...257, 258
Piping .....268 to 269
Blowing out ..... 268
Effect on emergency application ..... 269
Elbows and short bends 268
Securing ..... 269

PAGE

Piping:
Testing ..... 269
To loosen scale ..... 268
Sags ..... 268
Use of red lead or other compound ..... 268
Use of larger pipe on freight cars ..... 269
Piston area, to calculate.... 296
Piston lever ..... 55
Piston travel .....54 to 65
Advantages and disadvantages (long)...62, 63
Advantages and disadvantages (short)..62, 63
Car light or loaded .... 61
Effects if uneven..... 58
Effect on power...55 to 57
Proper amount.....61, 62
Running .....60 to 69
Standing .....60 to 69
Table of pressures..... 56
Taking up.....62, 63
Too long ..... 60
Too long, using slack adjuster .....71, 72
To tell how long without air ..... 61
To wear out brake shoes, 295, 296
Piston travel, proper amount 236
Plain automatic air brake.18, 19
Plain automatic air brake, car equipment ..... 21
Plain triple valve emergency application ..... 33
Plain triple valve, operation .....27 to 34
Plain triple valve, parts.22, 23
Plain triple valve, service application .....28 to 32
Plain triple valve, use of, Plate II, 34
Position of cock handles.... 235
Pumps .....132 to 153
Cause of blows..... 138
Cause of dancing..... 142
Cause of heating ..... 142
Cause of pounding..... 138
Cause of starting slow.. 156
Cause of stopping...141, 143
Eight-inch .....145 to 149
Eight-inch, capacity ... 133
Eight-inch, lift of air valves ..... 145
Eight-inch, operation .. 145 to 149
Eight-inch, troubles..... 148
Eleven-inch .....151 to 153
Eleven-inch, capacity... 151
Eleven-inch, operation .. 151
Eleven-inch, parts ..... 151
How to clean ..... 143
How to cool ..... 142
How to run ..... 141
Location ..... 138

PAGE

Pumps:
Nine and one-half inch .....132 to 144
Nine and one-half inch, capacity ..... 133
Nine and one-half inch, lift of air valves.... 142
Nine and one-half inch, operation .....134 to 137
Nine and one-half inch, packing ..... 137
Nine and one-half inch, valve motion ....133, 134
Nine and one-half inch, right and left....149, 150
Oiling air end ..... 138
Oiling steam end ..137, 138
Starting ..... 138
Uneven strokes of..140, 141
Pump governors .....154 to 160
Blow at relief port.... 157
Description — Improved type ..... 154
Drip pipe closed ..... 156
Operation — Improved type .....154 to 156
Operation, old style, 157 to 159
Relief port closed in pump governor ..... 156
Sensitiveness of pump governor ..... 159

QUICK-ACTION triple valve, advantages ..... 35
Quick-action triple, operation .....35 to 48
Quick-action triple valve, emergency application.37 to 39
Quick-action triple valve, parts and use.....36 to 38

RECHARGING on grade..... 250
Recording gauges. See Air brake recording gauges.
Reduction, full service..247, 248
Reduction, initial .....246, 247
Regulating valve stem too long ..... 103
Release, following emergency application ..... 254
Release of long travel brakes 259
Releasing brakes, freight train .....256, 257
Releasing brakes on passenger train ..... 256
Report of train test..... 237
Retaining valve gone..... 239
Retaining valves .....74 to 83
Retaining valves, advantages .....251, 252
Defects .....77, 78
Different types, names and uses .....81 to 8[illegible]
Location ..... 7

PAGE

Retaining valves:
Operation .....75, 76
Special advantage.78 to 80
Table of pressures .... 80
To test .....77, 236, 237
Uses .....74, 77, 78
Retaining valves, use of.... 258
Retaining valves, using a few 258
Reversing engine with air brake applied ..... 261
Rules and formulæ for air-brake inspectors ...295 to 299
Runaway trains ..... 257

SCHEDULE U or high-pressure control. See High-pressure control .....197 to 200
Schedule U. See High-pressure control.
Shoe movement ..... 295
Signal system .....170 to 184
Car discharge valve ... 171
Parts on car ..... 171
Parts on engine ..... 170
Reducing valve, duty... 172
Reducing valve, location ..... 171
Reducing valve, operation ..... 172
Reducing valve, operation (old style)..... 174
Signal strainer, engine.. 173
Signal valve, location.. 171
Strainer, engine ..... 173
Whistle .....174, 175
Signal valve operation.175 to 177
Blows when brake is released ..... 182
Cause of whistle screeching ..... 182
Constant blow ..... 184
How to change pressure ..... 184
How to test pressure... 183
Improper response. 181, 182
Lack of air .....179, 180
Long blast ..... 183
Method of using ..... 178
No response .....180, 181
Troubles .....179, 184
Slack adjuster, cleaning.... 73
How to apply.....71, 72
Operation .....66, 67
Parts and use ..... 66
Piston travel too long.71, 72
Piston travel too short, 71, 72
Stuck .....72, 73
Slide valve feed valve.101 to 104
Defects .....103, 104
Duties .....25, 26
How to adjust..... 103
Leak in supply valve... 45
Operation .....101, 103
Parts ..... 104

PAGE

Slide valve feed valve:
Regulation ..... 103
Use ..... 101
Regulating valve too long 103
Stops, freight train ....266, 267
Stops, passenger trains..... 257
Stops, to estimate length of. 299
Stops, water tank.....255, 256
Straight-air and automatic combined. See Combined automatic and straight-air.
Straight-air brake. See Combined automatic and straight-air brake.
Straight-air brake valve.
Straight-air brake .....17, 18
Stuck brakes .....251, 259
Stuck triple piston.....43, 44
Stuck air valves ....139 to 141

THE Sweeney compressor... 161
Taking on cars, test..... 258
Tests. See Brake tests.
Testing a train.....234, 242
The water brake .....162 to 169
Thermal brake test.....241, 242
Time to charge a train..235, 236
Too little excess ..... 128
Total leverage ..... 295
Train handling .....243 to 261
Train inspection .....234 to 242
Train, leaving on grade.... 259
Train line exhaust, blow.... 249
Train line governor (old style). See Feed valve (old style) or train line governor.
Train line leaks, 45, 237 to 239, 252, 253, 260
Train line pressure too high .....106, 107
Train line, usual pressure... 95
Triple feed grooves dirty.... 242
Triple piston dirty or stuck.43, 44
Triple valve, dirty strainers. 41
Triple valve, duties of graduating valve .....24, 25
Triple valve, duties of piston 24
Triple valve, feed ports.27, 31, 32
Triple valve, leaks ..... 45
Triple valve, plain, operation .....27 to 34
Triple valve, plain, parts.22, 23
Triple valve, slide valve, duties .....25, 26
Triple valve, slide valve leak 45
Triple valve testing plants, 217 to 227
Cleaner's test ..... 223
Controlling valve operation .....217 to 219
Repair test ..... 227
Shop repair test ..... 225
Yard test .....219 to 223

PAGE
Triple valve, why so called.. 27
Triple valve, quick-action, advantages ..... 35
Triple valve, quick-action, emergency application.37 to 39
Triple valve, quick-action, parts and use.....36 to 38
Turntable stops ..... 255
USE of brake valves..... 132

PAGE
VOLUME of cylinder, to calculate ..... 296
WATER in brake system..... 42
Water brake .....163 to 169
For compound engines .....165 to 169
For simple engines.163 to 165
Water tank stops.....255, 256
Weak graduating spring..42, 43
Weak release spring..... 240

## INDEX TO APPENDIX

B 3 reducing valve..... 340
B 4 feed valve .....339, 340
Brake valve H 5..... 314
Brake valve, H 5, description of .....314 to 321
Brake valve, H 5, emergency application ..... 319
Brake valve, H 5, emergency position ..... 315
Brake valve, H 5, holding position ..... 318
Brake valve, H 5, holding position .....314, 315
Brake valve, H 5, illustrations .....Plate XIII
Brake valve, H 5, lap position ..... 319
Brake valve, H 5, oil plug... 320
Brake valve, H 5, positions.. 314
Brake valve, H 5, release position ..... 317
Brake valve, H 5, running position ..... 318
Brake valve, H 5, service application ..... 319
Brake valve S. F., description of operation...321 to 326
Brake valve S. F., illustrations .....Plate XIII
Brake valve (S. F.), independent .....321 to 326
Brake valve, S. F., positions of handle .....322, 323

COMBINED strainer and check valve ..... 312
Cross-compound pump.358 to 367
Cross-compound pump, capacity of .....366, 367
Cross-compound pump, care of ..... 367
Cross-compound pump, down stroke of, high-pressure piston .....363 to 365
Cross-compound pump, maximum pressure operated against ..... 366
Cross-compound pump, operation of .....359 to 367
Cross-compound pump, upstroke of high-pressure piston ..... 361

DISTRIBUTING valve, automatic operation of..... 332
Distributing valve, description of .....327 to 336
Distributing valve, different positions ..... 329
Distributing valve, emergency application.....333, 334
Distributing valve, illustrations .....Plate XIII
Distributing valve, independent application..... 330
Distributing valve, independent release..... 335
Defects with E T equipment, 346 to 349
Double heading equipment... 313

E T, parts of ..... 308
E T, advantages of.....308, 309
E T Brake, E T, improvements embodied ..... 307
E T double heading equipment ..... 313
E T brake equipment..... 307
E T equipment, defects, 346 to 349
E T equipment, operation of, 308 to 313
E T, kind of service used in ..... 308
E T, piping diagram..Plate XIII
Excess pressure governor, S. F.-4 .....342 to 345

FEED valve, see B 4 feed valve and B 3 reducing valve .....339 to 341
H 5 brake valve, see Brake valve ..... 314

INDEPENDENT brake valve, purpose of ..... 311
Independent brake valve, see Brake valve (S. F.).

K TRIPLE valve, see Triple valve.

MAIN reservoir cut-out cock.. 3

PAGE

POSITIONS of brake valve, see Brake valve.
Pump, cross-compound, see Cross-compound pump.
Pump governor, S F-4 (excess pressure) ....342 to 345

SAFETY valve, with E T equipment .....337, 338
Schedule E T..... 307
Schedule E T, improvements embodied ..... 307
S F brake valve, see Brake valve (S F.).
S F-4 pump governor (excess pressure) ....342 to 345

TRIPLE valve, K, advantages of .....350, 351
Triple valve, K, different kinds ..... 356

PAGE

Triple valve, K, effect on other valves ..... 351
Triple valve, K, emergency position ..... 356
Triple valve, K, equalization with ..... 351
Triple valve, K, lap position ..... 354
Triple valve, K, operation of .....353 to 357
Triple valve, K, parts of... 352
Triple valve, K, release position ..... 353
Triple valve, K, retarded release position .....354, 355
Triple valve, K, service position ..... 353
Triple valve, K type (quick service), illustrations. Plate XIV

LIBRARY OF THE UNIVERSITY OF CALIFORNIA

## INDEX TO No. 6 ET LOCOMOTIVE BRAKE EQUIPMENT.

PAGE.

Dead-engine bypass ..... 371
Differences between No. 5 and No. 6 Equipment..... 368
H-6 automatic brake valve..... 371
Manipulation..... 368

PAGE.

No. 6 distributing valve..... 372
No. 6 ET equipment..... 368
Piping..... 369
Piping diagrams..... 370

THE BEST FLANGE PACKING MADE.

RAINBOW PACKING

MAKES A STEAM, FLANGE AND HOT WATER JOINT INSTANTLY.

NOTICE OUR TRADE-MARK.

The word "RAINBOW" in a diamond in three rows of diamonds in black, extending throughout the entire length of each and every roll of

RAINBOW PACKING

The only thoroughly reliable flange packing in the world.
Can't blow Rainbow out.
For steam, hot water, oil, ammonia, air or cold water joints.

Manufactured Exclusively by

Peerless Rubber Manufacturing Co.

16 Warren Street, NEW YORK
88 Chambers Street, NEW YORK

# PEERLESS AIR BRAKE HOSE.

Specifications for Air Brake Hose made according to requirements of Master Car Builders' Association for 1903 and 1905.

Our "Perfected" Air Brake Hose is the acme of perfection, as it increases the life of hose, reduces to a minimum mechanical motion, kinking, expansion and elongation.

We are the largest manufacturers in the world of Air Brake, Steam, Pneumatic and Water Hose, Gaskets, Rubber Tiling and Wainscoting, Vestibule Diaphragms, Packings and all rubber supplies used by Railroad Companies.

## PEERLESS RUBBER MFG. CO.

**16 Warren and 88 Chambers Street, New York.**

**1908 EDITION—JUST PUBLISHED**

# LOCOMOTIVE CATECHISM

**By ROBERT GRIMSHAW**

**805 Pages, 437 Illustrations and Three Folding Plates. Price $2.50**

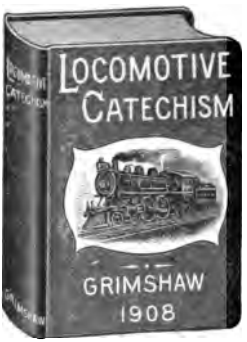


The 1908 edition of "Locomotive Catechism" by Robert Grimshaw **is a new book from cover to cover.** It contains twice as many pages and double the number of illustrations, of previous editions. Specially **prepared Chapters on the Walschaert Locomotive Valve Gear, the Air Brake Equipment and the Electric Head Light are given.**

Treats fully and in detail on the design, construction, repair and running of all kinds of Locomotives. Among the subjects which we might mention as being included are: Classifications of Locomotives, Boilers and Accessories, Flues, Cylinders, Pistons, Piston Valves, Cranks and Crank Pins, Eccentric Motions, Exhaust Coughs, Air Brakes, Lubricators, Knocks and Pounds, Compound Locomotives, Accidents and Breakdowns, Electric Head Light, Equalizers, Combustion, Firing with Oil, Walschaert Valve Gear, etc.

**Contains over 4,000 Examination Questions with their Answers.**

---

**1908 EDITION—JUST PUBLISHED**

# Locomotive Breakdowns and Their Remedies

**By GEO. L. FOWLER, revised by WM. W. WOOD**

**285 Pages** **Fully Illustrated** **Price $1.00**

The new 1908 edition of Locomotive Breakdowns has been revised by Wm. W. Wood the railroad expert, which is sufficient guarantee that this work represents the best practice of the present day and is exhaustive in text and illustrations.

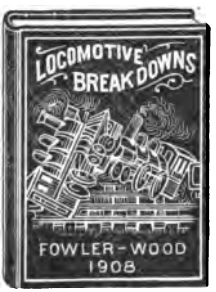


Engineers are paid nowadays for getting their engines in to the terminal on time, and to accomplish this, there must be no casualties **en route** that will cause delay; accidents, however, will happen, and it is the knowledge of **How to Avoid Delay in Case of Accidents** that the Company requires of engineers nowadays, and what to do in case of breakdowns. The revised 1908 edition of "Locomotive Breakdowns" is virtually necessary to every engineer, fireman and shop man, because it treats of every possible engine trouble and presents the remedy, in the form of questions and answers.

**Among the Contents are Chapters on** Defective Valves, Accidents to the Valve Motion, Cylinders, Steam Chests, Cylinders and Pistons, Guides, Crossheads and Rods, Running Gears, Truck and Frame Accidents, Boiler Troubles, Defective Throttle and Steam Connections, Defective Draft Appliances, Pump and Injector Troubles, Accidents to Cab Fixtures, Tender Accidents, Miscellaneous Accidents, Compound Locomotive Accidents, Tools and Appliances for Making Engine Repairs, Air Brake Troubles, Walschaert Valve Gear Troubles, Electric Headlight Troubles, etc.

**Contains Over 800 Questions with their Answers**

---

☞ ***Copies of these Books sent prepaid on receipt of the price***

**The NORMAN W. HENLEY PUBLISHING CO.**

**132 Nassau Street, New York, U. S. A.**

# NEW YORK AIR BRAKE CATECHISM

BY ROBERT H. BLACKALL

Author of Westinghouse Air Brake Catechism

**250 Pages, Fully Illustrated, Bound in Cloth, Price $1.00**

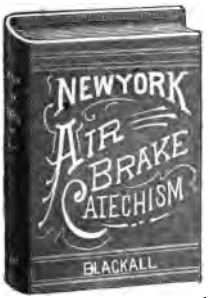


This is the only complete treatise on the New York Air Brake and Signaling Apparatus, giving a detailed description of all the parts, their operation, troubles and the methods of locating and remedying the same. It includes and fully describes and illustrates the Plain Triple Valves, Quick-Action Triple Valve, Duplex Pump, Pump Governor, Brake Valves, Retaining Valves, Freight Equipment, Signal Valve, Signal Reducing Valve, and Cam Discharge Valve. It has been endorsed by the New York Air Brake Co. Contains nearly 1,000 questions and their answers on the New York Air Brake and Signal apparatus.

# BLACKALL'S WESTINGHOUSE AIR BRAKE CHARTS

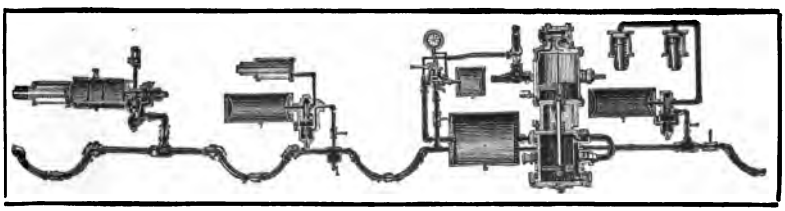

**PRICE 50 CENTS**

UP-TO-DATE Air Brake Charts, each 14 x 50 inches, printed in ten different colors on heavy ledger paper, showing the different connections from the engine throughout train. The Pump, Engineer's valve, Triples and all parts used are shown, each pressure being represented by a distinct color. Every student of the air brake should possess these charts, as they are a complete Air Brake Course in themselves.

CHART I.—Shows the most modern Westinghouse High Speed and Signal Equipment used on Passenger Engines, Passenger Engine Tenders and Passenger Cars.

CHART II.—Shows the Standard Westinghouse Equipment for Freight and Switch Engines, Freight and Switch Engine Tenders and Freight Cars.

☞ *Copies of these Books sent prepaid on receipt of the price*

**The NORMAN W. HENLEY PUBLISHING CO.**

**132 Nassau Street, New York, U. S. A.**

# THE WALSCHAERT

## LOCOMOTIVE VALVE GEAR

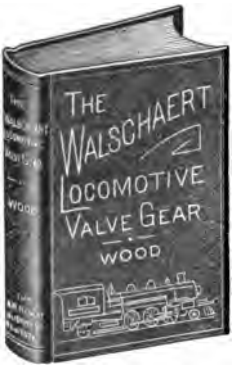


**By WM. W. WOOD, Air Brake Instructor**

**Nearly 200 Pages** **PRICE $1.50** **Fully Illustrated**

The only book issued that is devoted exclusively to the Walschaert Valve gear. If you would thoroughly understand the Walschaert Valve Gear you should possess a copy of this book, as the author takes the plainest form of a steam engine, a stationary engine in the rough, that will only turn its crank in one direction and from it builds up—with the reader's help—a modern locomotive equipped with the Walschaert Valve Gear, complete.

The points discussed are clearly illustrated: two large folding plates that show the position of the valves of both inside or outside admission type, as well as the links and other parts of the gear when the crank is at nine different points in its revolution are especially valuable in making the movement clear. These employ sliding cardboard models which are contained in a pocket in the cover.

**The book is divided into four general divisions, as follows:**

I. Analysis of the gear. II. Designing and erecting the gear. III. Advantages of this gear. IV. Questions and answers relating to the Walschaert Valve Gear.

This last division contains sixty pertinent questions with full answers on all the features of this type of valve gear, which will be especially valuable to firemen and engineers in preparing for an examination for promotion.

---

**21st EDITION** **REVISED AND ENLARGED**

## UP-TO-DATE

# AIR BRAKE CATECHISM

**By ROBERT H. BLACKALL**

**Assistant to General Manager Westinghouse Air Brake Co.**

## PRICE $2.00

**The Standard Book on the Air Brake. Contains over 2,000 questions and answers giving a detailed description of all the Old Standard and Improved Equipment.**

Owing to the many changes and improvements made in the Westinghouse Air Brake, it has been found necessary to issue the new, revised edition, which contains all the latest information necessary for a railroad man to pass his examination on the new as well as the older style of brake.

The new revised edition covers fully and in detail the Schedule ET Locomotive Brake Equipment, H-5 Brake Valve, SF Brake Valve (Independent), SF Governor Distributing Valve, B-4 Feed Valve, B-3 Reducing Valve, Safety Valve, K Triple Valve (Quick-Service) Compound Pump.

---

☞ *Copies of these Books sent prepaid on receipt of the price*

**The NORMAN W. HENLEY PUBLISHING CO.**

**132 Nassau Street, NEW YORK, U. S. A.**

# Train Rules and Train Dispatching

**By H. A. DALBY**

**Over 220 Pages** **Fully Illustrated**

**Bound in Leather** **Price $1.50**

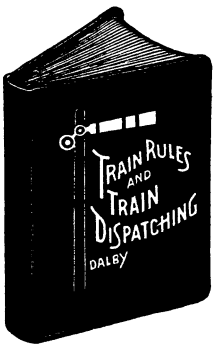


Every railroad man, no matter what department he's in, needs a copy of this little book in his clothes all the time. It gives the standard rules for both single and double track, shows all the signals, with colors wherever necessary, and has a list of towns where time changes, with a map showing the whole country. Then the rules are explained wherever there is any doubt about their meaning or where they are modified by different railroads. It's the only practical book on train rules in print.

# RAILROAD POCKETBOOK

**By FRED H. COLVIN**

**250 Pages** **Fully Illustrated** **Price $1.00**

Different from any book you ever saw. Gives clear and concise information on just the points you are interested in. It's really a pocket encyclopædia, fully illustrated, and so arranged that you can find just what you want in a second without an index. Among the subjects included are:

| | | |
|---|---|---|
| Acetylene Headlights | Ejectors | Oil Burners |
| Air Brakes | Fire Box | Rails |
| Brake Leverage | Crossheads and Guides | Rods, Straps and Brasses |
| Boilers | Headlights | Superheated Steam |
| Brakes | Horse Power | Tractive Power |
| Car Heating | Indicators | Valve Motion |
| Coal | Injectors | Walschaert Gear |
| Curves | Link Motion | |
| Cylinders | | |

☞ *Copies of these Books sent prepaid on receipt of the price*

**The NORMAN W. HENLEY PUBLISHING CO.**

**132 Nassau Street, New York, U. S. A.**

# LINK MOTIONS. VALVES AND VALVE SETTING

**By FRED. H. COLVIN**

**Fully Illustrated** **Price 50 Cents**

A HANDY little book for the engineer or machinist that clears up the mysteries of valve setting.. Shows the different valve gears in use, how they work and why. Piston and slide valves of different types are illustrated and explained. A book that every railroad man in the motive power department ought to have. Contains chapters on : Locomotive Link Motion, Valve Movements, Setting Slide Valve, Analysis by Diagrams, Modern Practice, Slip of Block, Slide Valves, Piston Valves, Setting Piston Valves, Joy-Allen Valve Gear, Walschaert Valve Gear, Gooch Valve Gear, Alfree-Hubbell Valve Gear, etc., etc.

# MACHINE SHOP ARITHMETIC

**By COLVIN-CHENEY**

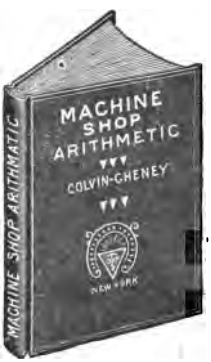


Most popular book for shop men. Shows how all shop problems are worked out and "why." Includes change gears for cutting any threads; drills, taps, shink and force fits; metric system of measurement and threads. Used by all classes of mechanics..... **50c.**

## CAR CHARTS

Shows and names all the parts of the three types of cars. Passenger—Box—Gondola. Printed on heavy plate paper and mailed in a tube, each **25c.**

## TRACTIVE POWER CHART

A chart whereby you can find the tractive power or drawbar pull of any locomotive, without making a figure. Shows what cylinders are equal, how driving wheels and steam pressure affect the power. What size engine you need to exert a given drawbar pull or anything you desire in this line. Printed on tough jute paper to stand rolling or folding..... **50c.**

*☞ Copies of these Books sent prepaid on receipt of the price*

**The NORMAN W. HENLEY PUBLISHING CO.**

**132 Nassau Street, New York, U. S. A.**

A CATECHISM ON THE

# COMBUSTION OF COAL

## AND THE PREVENTION OF SMOKE

**By WILLIAM M BARR**

**Nearly 350 Pages  85 Engravings  Cloth Binding  Price $1.50**

An up-to-date Treatise on How to Make Steam, including Special Instructions as adopted by the Mechanical Department of the C. N. Q. & T. P. R. R., as well as descriptive matter on devices for smoke prevention of the Locomotive Smoke Preventor Company: The Brick Arch; The Strong and Wootten Boilers; The Southern Pacific Front End and Fire Door; and the Methods of the Southern Pacific Railway in Burning Liquid Fuel, etc., etc.

### AMONG THE SUBJECTS TREATED ARE

Fuel.
Elementary Data.
Combustion.
Products of Combustion.
Heat Developed by Combustion.
Fuel Analysis.
Heating Power of Fuel.
Steam Generation.
Stationary Furnace Details.
Locomotive Furnace Details.
Chimney and Mechanical Drafts.
Spontaneous Combustion.

# BOILER CONSTRUCTION

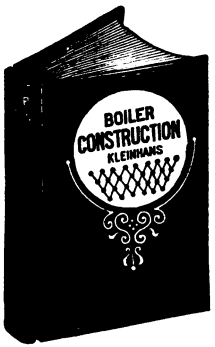


**By FRANK A. KLEINHANS**

**Over 400 Pages  Price $3.00**

**5 Large Folding Plates  Fully Illustrated**

The only book showing how locomotive boilers are built in modern shops. Shows all types of boilers used; gives details of construction; practical facts, such as life of riveting punches and dies, work done per day, allowance for bending and flanging sheets and other data that means dollars to any railroad man.

### CONTAINS CHAPTERS ON

Laying Out Work.
Flanging and Forging.
Punching.
Shearing.
Plate Planing.
General Tables.
Finishing Parts.
Bending.
Machining Parts.
Riveting.
Boiler Details.
Smoke Box Details.
Assembling and Calking.
Boiler Shop Machinery, etc., etc.

*Copies of these Books sent prepaid on receipt of the price*

**The NORMAN W. HENLEY PUBLISHING CO.**

**132 Nassau Street, New York, U. S. A**

UNIVERSITY OF CALIFORNIA LIBRARY
BERKELEY

THIS BOOK IS DUE ON THE LAST DATE STAMPED BELOW

Books not returned on time are subject to a fine of 50c per volume after the third day overdue, increasing to $1.00 per volume after the sixth day. Books not in demand may be renewed if application is made before expiration of loan period.

DEC 21 1918

50m-7,'16

YB 10889

TF425
B6
1908
Blackall
179712